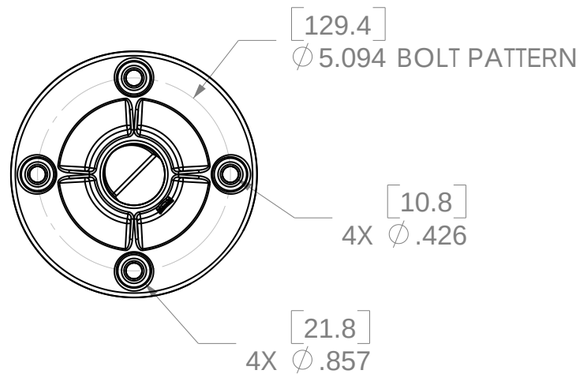
[129.4]
∅5.094 BOLT PATTERN
[10.8]
4X ∅.426
[21.8]
4X ∅.857

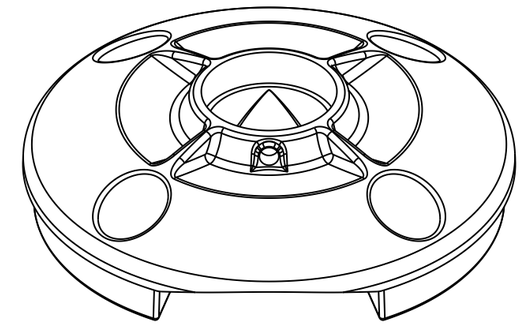

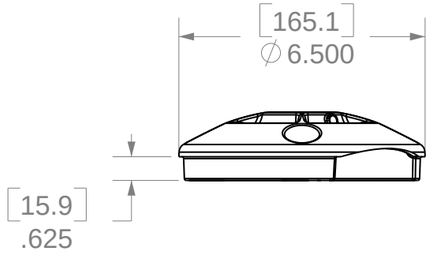
[165.1]
∅6.500
[15.9]
.625

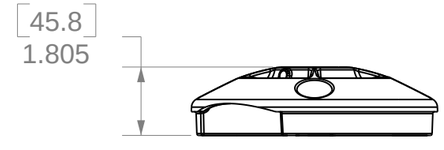
[45.8]
1.805

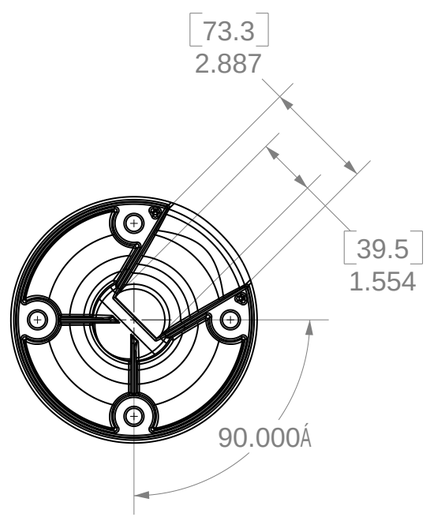
[73.3]
2.887
[39.5]
1.554
90.000Á