BS
OR-G-HC12-1
panel is notched
on bottom
left

bleed area
trim line

Hercules 12
10′ x 20′ Truss System
Dye Sub Printed

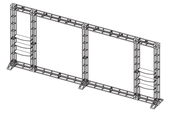

TEMPLATE IS @ 1/2 SCALE
Panel HC12-1 and HC12-4:
Total Graphic Area: 29.75″w x 87.75″h
Finished Size: 25.75″w x 83.75″h

Panel HC12-2 and HC12-3:
Total Graphic Area: 77.75″w x 87.75″h
Finished Size: 73.75″w x 83.75″h

Template requires 1″ bleed around the perimeter (2″ around the perimeter when scaled to 200% and printed)

FS = Graphic is front side mounted (3/4″ w velcro is applied to the back of the panel)
BS = Graphic is back side mounted (3/4″w velcro is applied to the front of the panel)
Notching = 7/8″ square that is cut into the appropriate location.
Hinging= 3/4″ strip of material that is created by notching the graphic. Allows two graphics to share the same extrusion corner.

General Art Guidelines:

- CMYK Color Mode
- All Solid Coated Pantone colors should be called out in the art as spot colors
- Embed all images and support files
- Resolution must be 200-240 ppi @ 1/2 size, 100-120ppi @ 100% size
- All fonts must be created to outlines
- Do not scale artboard
- Background color/images must bleed to the edge of artboard
- Do not use spot colors from template in your artwork as they will not print

BS
OR-G-HC12-2
panel is notched
on bottom
right

BS
OR-G-HC12-3
panel is notched
on bottom
left

BS
OR-G-HC12-4
panel is notched
on bottom
right

gray area will
be obstructed
once finished
and mounted

BS

OR-G-HC12-1

panel is notched
on bottom
left

bleed area
trim line

Hercules 12
10′ x 20′ Truss System
Dye Sub Printed

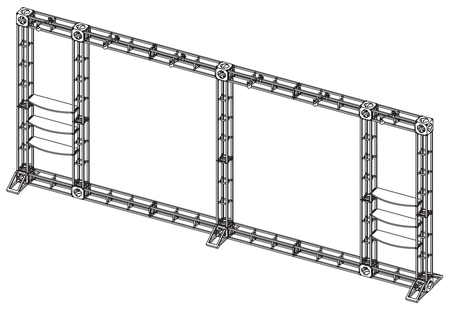

TEMPLATE IS @ 1/2 SCALE
Panel HC12-1 and HC12-4:
Total Graphic Area: 29.75″w x 87.75″h
Finished Size: 25.75″w x 83.75″h

Panel HC12-2 and HC12-3:
Total Graphic Area: 77.75″w x 87.75″h
Finished Size: 73.75″w x 83.75″h

Template requires 1″ bleed around the perimeter (2″ around the perimeter when scaled to 200% and printed)

FS = Graphic is front side mounted (3/4″ w velcro is applied to the back of the panel)
BS = Graphic is back side mounted (3/4″w velcro is applied to the front of the panel)
Notching = 7/8″ square that is cut into the appropriate location.
Hinging= 3/4″ strip of material that is created by notching the graphic. Allows two graphics to share the same extrusion corner.

General Art Guidelines:

- CMYK Color Mode
- All Solid Coated Pantone colors should be called out in the art as spot colors
- Embed all images and support files
- Resolution must be 200-240 ppi @ 1/2 size, 100-120ppi @ 100% size
- All fonts must be created to outlines
- Do not scale artboard
- Background color/images must bleed to the edge of artboard
- Do not use spot colors from template in your artwork as they will not print

BS
OR-G-HC12-2

panel is notched on bottom right

BS

OR-G-HC12-3

panel is notched
on bottom
left

BS

OR-G-HC12-4

panel is notched
on bottom
right

gray area will
be obstructed
once finished
and mounted