## Formulate:
## Backwall Connector 02

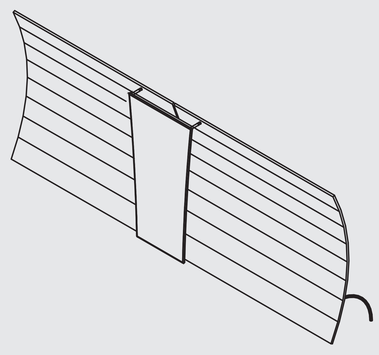

Total Graphic Area: 51.86”w X 96”h
Total Visual Area: 47.86”w X 92”h

Please be sure to include the 2” bleed around the perimeter (note trim & stitch locations on template). DO NOT design any critical elements (text, logos, etc.) within 2” of the edge.

## General Art Guidelines:

– CMYK Color Mode

– All Solid Coated Pantone colors should be called out in the art as spot colors

– Embed all images and support files

– Resolution must be 100-120 ppi

– All fonts must be created to outlines

– Do not scale artboard

– Background color/images must bleed to the edge of artboard

– Do not use spot colors from template in your artwork as they will not print

# FRONT

bleed area
trim line
safe zone