37.75″ height

FS
OR-G-AH1-E
panel is notched 7/8″
on all 4 corners.
Inward hinged on
left and right side.

FS
OR-G-AH2-E
panel is notched 7/8″
on all 4 corners.
Inward hinged on
left and right side.

FS
OR-G-AH3-E
panel is notched 7/8″
on all 4 corners.
Inward hinged on
left and right side.

FS
OR-G-AH4-E
panel is notched 7/8″
on all 4 corners.
Inward hinged on
left and right side.

no spacing between
panels once mounted,
gray line indicates visual
edge of graphics

no spacing between
panels once mounted,
gray line indicates visual
edge of graphics

no spacing between
panels once mounted,
gray line indicates visual
edge of graphics

no spacing between
panels once mounted,
gray line indicates visual
edge of graphics

no spacing between
panels once mounted,
gray line indicates visual
edge of graphics

129.75″ width

FS
OR-G-AH2-A

bleed area
trim line

93.75″ width

FS
OR-G-AH2-D
panel is notched 7/8″
on bottom left and right corners

space between graphic
panels: approx. 4.5″

129.75″ width

FS
OR-G-AH2-B

space between graphic
panels: approx. 4.5″

93.75″ width

FS
OR-G-AH2-C
panel is notched 7/8″
on bottom left and right corners

space between graphic
panels: approx. 4.5″

83.75″ height

39.5″ width

Aarhus
20' x 20' Truss System
UV Printed

TEMPLATE is IN 1/4 SCALE
Panels AH1-A and AH1-B, AH3-A and AH3-B:
Total Graphic Area: 41.75"w x 84.75"h
Finished Size: 39.5"w x 83.75"h

Panel AH2-A and AH2-B:
Total Graphic Area: 133.75"w x 41.75"h
Finished Size: 129.75"w x 37.75"h

Panels AH1-C, AH1-D, AH3-C, AH3-D:
Total Graphic Area: 51.5"w x 85.75"h
Finished Size: 49"w x 83.75"h

Panels AH2-C and AH2-D:
Total Graphic Area: 97.75"w x 41.75"h
Finished Size: 93.75"w x 37.75"h

Panels AH1-E and AH3-E:
Total Graphic Area: 133.75"w x 41.75"h
Finished Size: 129.75"w x 37.75"h
Visual Size: 128.875"w X 36.875"h

Panels AH2-E and AH4-E:
Total Graphic Area: 97.75"w x 41.75"h
Finished Size: 93.75"w x 37.75"h
Visual Size: 92.875"w X 36.875"h

Template requires 1/8" bleed around the perimeter (1/2" around the perimeter when scaled to 400% and printed)

FS = Graphic is front side mounted (3/4" w magnet is applied to the back of the panel)
BS = Graphic is back side mounted (3/4" w velcro is applied to the front of the panel)
Notching = 7/8" square that is cut into the panel corners
Hinging= 3/4" strip of material that is cropped from the panel and reapplied as a hinge
Allows two graphics to share the same extrusion corner.

General Art Guidelines:
– CMYK Color Mode
– Spot Color (Pantone colors should be called out in the art as spot colors
– Embed all images and support files
– Image Resolution: 150-300dpi @ 100% size for text, 100-150dpi @ 100% size
– All fonts must be created to outlines
– Do not scale artboard
– Background color/images must bleed off the edge of the artboard
– Do not use spot colors from template in your artwork as they will not print

FS
OR-G-AH1-A

39.5″ width

FS
OR-G-AH3-A

49″ width

FS
OR-G-AH1-D
panel is notched 7/8″
on top right corner

49″ width

FS
OR-G-AH3-D
panel is notched 7/8″
on top left corner

39.5″ width

FS
OR-G-AH1-B

39.5″ width

FS
OR-G-AH3-B

49″ width

FS
OR-G-AH1-C
panel is notched 7/8″
on top right corner

49″ width

FS
OR-G-AH3-C
panel is notched 7/8″
on top left corner

FS

OR-G-AH1-E

panel is notched 7/8"
on all 4 corners.
Inward hinged on
left and right side.

FS

OR-G-AH2-E

panel is notched 7/8″
on all 4 corners.
Inward hinged on
left and right side.

FS

OR-G-AH3-E

panel is notched 7/8″
on all 4 corners.
Inward hinged on
left and right side.

FS

OR-G-AH4-E

panel is notched 7/8″
on all 4 corners.
Inward hinged on
left and right side.

FS

OR-G-AH2-A

bleed area

trim line

FS

OR-G-AH2-D

panel is notched 7/8″
on bottom left and right corners

FS

OR-G-AH2-B

FS

OR-G-AH2-C

panel is notched 7/8"
on bottom left and right corners

Aarhus
20’ x 20’ Truss System
UV Printed

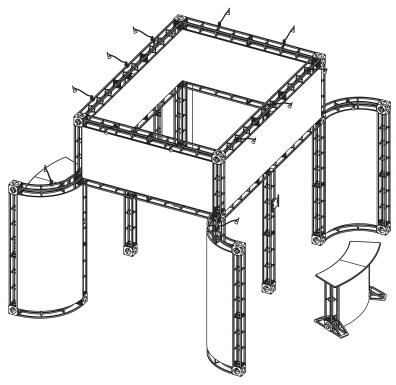

TEMPLATE IS @ 1/4 SCALE
Panels AH1-A, AH3-A, AH1-B, AH3-B:
Total Graphic Area: 40.5”w x 84.75”h
Finished Size: 39.5”w x 83.75”h

Panel AH2-A and AH2-B:
Total Graphic Area: 133.75”w x 41.75”h
Finished Size: 129.75”w x 37.75”h

Panels AH1-C, AH3-C, AH1-D, AH3-D:
Total Graphic Area: 53”w x 87.75”h
Finished Size: 49”w x 83.75”h

Panels AH2-C and AH2-D:
Total Graphic Area: 97.75”w x 41.75”h
Finished Size: 93.75”w x 37.75”h

Panels AH1-E and AH3-E:
Total Graphic Area: 133.75”w x 41.75”h
Finished Size: 129.75”w x 37.75”h
Visual Size: 128.875”w X 36.875”h

Panels AH2-E and AH4-E:
Total Graphic Area: 97.75”w x 41.75”h
Finished Size: 93.75”w x 37.75”h
Visual Size: 92.875“w X 36.875”h

Template requires 1/8” bleed around the perimeter (1/2” around the perimeter when scaled to 400% and printed)

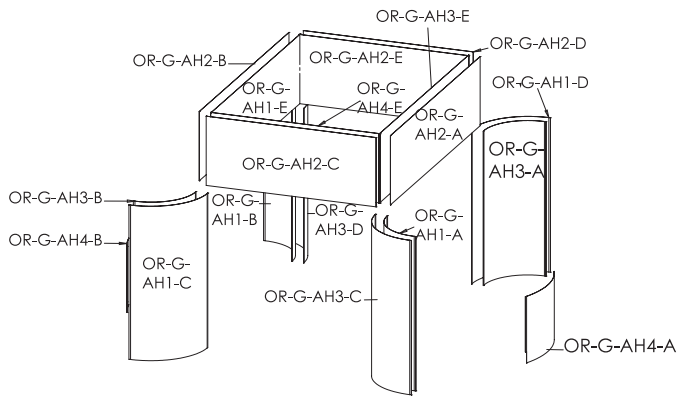

FS = Graphic is front side mounted (3/4” w magnet is applied to the back of the panel)
BS = Graphic is back side mounted (3/4” w velcro is applied to the front of the panel)
Notching = 7/8” square that is cut into the appropriate location.
Hinging= 3/4” strip of material that is cropped from the panel and reapplied with hinge tape.
Allows two graphics to share the same extrusion corner.

General Art Guidelines:

- CMYK Color Mode
- All Solid Coated Pantone colors should be called out in the art as spot colors
- Embed all images and support files
- Resolution must be 400-480 ppi @ 1/4 size, 100-120ppi @ 100% size
- All fonts must be created to outlines
- Do not scale artboard
- Background color/images must bleed to the edge of artboard
- Do not use spot colors from template in your artwork as they will not print

FS
OR-G-AH1-A

FS

OR-G-AH3-A

FS
OR-G-AH1-D

panel is notched 7/8"
on top right corner

FS
OR-G-AH3-D

panel is notched 7/8"
on top left corner

FS

OR-G-AH1-B

FS

OR-G-AH3-B

FS
OR-G-AH1-C

panel is notched 7/8"
on top right corner

FS

OR-G-AH3-C

panel is notched 7/8"
on top left corner

Truss Counter Curved Style A UV Printed

Front Side Panel:
Total Graphic Area: 44" x 37.125"
Finished Size: 43" x 36.125"

Template requires 1/2" bleed around the perimeter

FS = Graphic is front side mounted (3/4"w magnet is applied to the back of the panel)

Notching = 7/8" x 6 1/8" rectangle that is cut into the appropriate location.

General Art Guidelines:

- CMYK Color Mode
- All Solid Coated Pantone colors should be called out in the art as spot colors
- Embed all images and support files
- Resolution must be 100-120ppi @ 100% size
- All fonts must be created to outlines
- Do not scale artboard
- Background color/images must bleed to the edge of artboard
- Do not use spot colors from template in your artwork as they will not print

FS

Compatible with Truss Counter: OR-G-TC-C-L

notched .875" x 6.125" on bottom left and right side.

bleed area

trim line