37.75” height

**FS**
**OR-G-AH1-E**
panel is notched 7/8”
on all 4 corners.
Inward hinged on
left and right side.

**FS**
**OR-G-AH2-E**
panel is notched 7/8”
on all 4 corners.
Inward hinged on
left and right side.

**FS**
**OR-G-AH3-E**
panel is notched 7/8”
on all 4 corners.
Inward hinged on
left and right side.

**FS**
**OR-G-AH4-E**
panel is notched 7/8”
on all 4 corners.
Inward hinged on
left and right side.

no spacing between
panels once mounted,
gray line indicates visual
edge of graphics

no spacing between
panels once mounted,
gray line indicates visual
edge of graphics

no spacing between
panels once mounted,
gray line indicates visual
edge of graphics

no spacing between
panels once mounted,
gray line indicates visual
edge of graphics

no spacing between
panels once mounted,
gray line indicates visual
edge of graphics

129.75” width

**FS**
**OR-G-AH2-A**

bleed area
trim line

93.75” width

**FS**
**OR-G-AH2-D**
panel is notched 7/8”
on bottom left and right corners

129.75” width

**FS**
**OR-G-AH2-B**

93.75” width

**FS**
**OR-G-AH2-C**
panel is notched 7/8”
on bottom left and right corners

space between graphic
panels: approx. 4.5”

space between graphic
panels: approx. 4.5”

space between graphic
panels: approx. 4.5”

83.75” height

39.5” width

**Aarhus**
**20’ x 20’ Truss System**
**Dye Sub Printed**

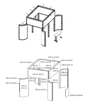


**TEMPLATE IS @ 1/4 SCALE**
Panels AH1-A, AH3-A, AH1-B, AH3-B:
Total Graphic Area: 43.5”w x 87.75”h
Finished Size: 39.5”w x 83.75”h
Visual Size: 39.5”w x 83.75”h

Panel AH2-A and AH2-B:
Total Graphic Area: 133.75”w x 41.75”h
Finished Size: 129.75”w x 37.75”h
Visual Size: 129.75”w x 37.75”h

Panels AH1-C, AH3-C, AH1-D, AH3-D:
Total Graphic Area: 57”w x 87.75”h
Finished Size: 49”w x 83.75”h
Visual Size: 49”w x 83.75”h

Panels AH2-C and AH2-D:
Total Graphic Area: 97.75”w x 41.75”h
Finished Size: 93.75”w x 37.75”h
Visual Size: 93.75”w x 37.75”h

Panels AH1-E and AH3-E:
Total Graphic Area: 133.75”w x 41.75”h
Finished Size: 129.75”w x 37.75”h
Visual Size: 128.875”w x 36.875”h

Panels AH2-E and AH4-E:
Total Graphic Area: 97.75”w x 41.75”h
Finished Size: 93.75”w x 37.75”h
Visual Size: 92.875”w x 36.875”h

Template requires .5” bleed around the perimeter of the panel. Perimeter when scaled to 400% and printed:

FS = Graphic is front side mounted (3/4” w velcro is applied to the back of the panel)
BS = Graphic is back side mounted (3/4”w velcro is applied to the front of the panel)
Notching = 3/8” square that is cut into the appropriate location.
Hingings 3/4” strip of material that is created by notching the graphic. Allows two graphics to share the same extrusion corner.

**General Art Guidelines:**

- CMYK Color Mode
- All Solid Coated Pantone colors should be called out in the art as spot colors
- Embed all images and support files
- Resolution must be 400-480 ppi @ 1/4 size, 100-120ppi @ 100% size
- All fonts must be created to outlines
- Do not scale artboard
- Artwork and backgrounds must bleed to the edge of artboard
- Do not use spot colors from template in your artwork as they will not print

**FS**
**OR-G-AH1-A**

39.5” width

**FS**
**OR-G-AH3-A**

49” width

**FS**
**OR-G-AH1-D**
panel is notched 7/8”
on top right corner

49” width

**FS**
**OR-G-AH3-D**
panel is notched 7/8”
on top left corner

39.5” width

**FS**
**OR-G-AH1-B**

39.5” width

**FS**
**OR-G-AH3-B**

49” width

**FS**
**OR-G-AH1-C**
panel is notched 7/8”
on top right corner

49” width

**FS**
**OR-G-AH3-C**
panel is notched 7/8”
on top left corner

# FS

## OR-G-AH1-E

panel is notched 7/8″
on all 4 corners.
Inward hinged on
left and right side.

# FS

## OR-G-AH2-E

panel is notched 7/8"
on all 4 corners.
Inward hinged on
left and right side.

# FS

## OR-G-AH3-E

panel is notched 7/8″
on all 4 corners.
Inward hinged on
left and right side.

# FS

## OR-G-AH4-E

panel is notched 7/8"
on all 4 corners.
Inward hinged on
left and right side.

# FS

## OR-G-AH2-A

bleed area

trim line

# FS

## OR-G-AH2-D

panel is notched 7/8″
on bottom left and right corners

# FS

## OR-G-AH2-B

# FS

## OR-G-AH2-C

panel is notched 7/8"
on bottom left and right corners

# Aarhus
# 20′ x 20′ Truss System
# Dye Sub Printed

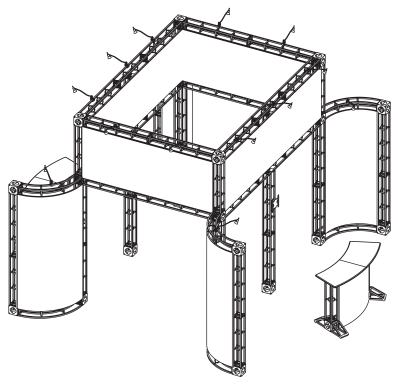

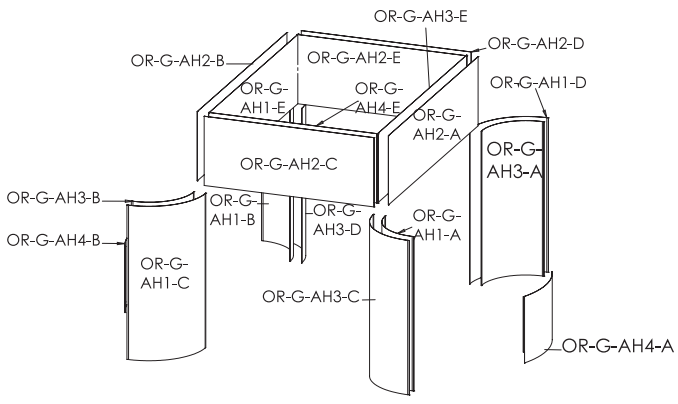


**TEMPLATE IS @ 1/4 SCALE**
Panels AH1-A, AH3-A, AH1-B, AH3-B:
Total Graphic Area: 43.5″w x 87.75″h
Finished Size: 39.5″w x 83.75″h
Visual Size: 39.5″w x 83.75″h

Panel AH2-A and AH2-B:
Total Graphic Area: 133.75″w x 41.75″h
Finished Size: 129.75″w x 37.75″h
Visual Size: 129.75″w x 37.75″h

Panels AH1-C, AH3-C, AH1-D, AH3-D:
Total Graphic Area: 53″w x 87.75″h
Finished Size: 49″w x 83.75″h
Visual Size: 49″w x 83.75″h

Panels AH2-C and AH2-D:
Total Graphic Area: 97.75″w x 41.75″h
Finished Size: 93.75″w x 37.75″h
Visual Size: 93.75″w x 37.75″h

Panels AH1-E and AH3-E:
Total Graphic Area: 133.75″w x 41.75″h
Finished Size: 129.75″w x 37.75″h
Visual Size: 128.875″w X 36.875″h

Panels AH2-E and AH4-E:
Total Graphic Area: 97.75″w x 41.75″h
Finished Size: 93.75″w x 37.75″h
Visual Size: 92.875″w X 36.875″h

Template requires .5″ bleed around the perimeter (2″ around the perimeter when scaled to 400% and printed)

FS = Graphic is front side mounted (3/4″ w velcro is applied to the back of the panel)
BS = Graphic is back side mounted (3/4″w velcro is applied to the front of the panel)
Notching = 7/8″ square that is cut into the appropriate location.
Hinging= 3/4″ strip of material that is created by notching the graphic. Allows two graphics to share the same extrusion corner.

## General Art Guidelines:

- CMYK Color Mode
- All Solid Coated Pantone colors should be called out in the art as spot colors
- Embed all images and support files
- Resolution must be 400-480 ppi @ 1/4 size, 100-120ppi @ 100% size
- All fonts must be created to outlines
- Do not scale artboard
- Background color/images must bleed to the edge of artboard
- Do not use spot colors from template in your artwork as they will not print

# FS
# OR-G-AH1-A

# FS
# OR-G-AH3-A

# FS
# OR-G-AH1-D

panel is notched 7/8”
on top right corner

# FS
# OR-G-AH3-D

panel is notched 7/8”
on top left corner

# FS
# OR-G-AH1-B

FS

OR-G-AH3-B

# FS
# OR-G-AH1-C

panel is notched 7/8”
on top right corner

# FS
# OR-G-AH3-C

panel is notched 7/8”
on top left corner

## Truss Counter Curved Style A Dye Sub Printed

Front Side Panel:
Total Graphic Area: 47" x 40.125"
Finished Size: 43" x 36.125"

Template requires 2" bleed around the perimeter

FS = Graphic is front side mounted (3/4" w velcro is applied to the back of the panel)
Notching = 7/8" x 6 1/8" rectangle that is cut into the appropriate location.

## General Art Guidelines:

- CMYK Color Mode
- All Solid Coated Pantone colors should be called out in the art as spot colors
- Embed all images and support files
- Resolution must be 100-120ppi @ 100% size
- All fonts must be created to outlines
- Do not scale artboard
- Background color/images must bleed to the edge of artboard
- Do not use spot colors from template in your artwork as they will not print

# FS

## Compatible with Truss Counter: OR-G-TC-C-L

**notched .875" x 6.125" on bottom left and right side.**

bleed area

trim line