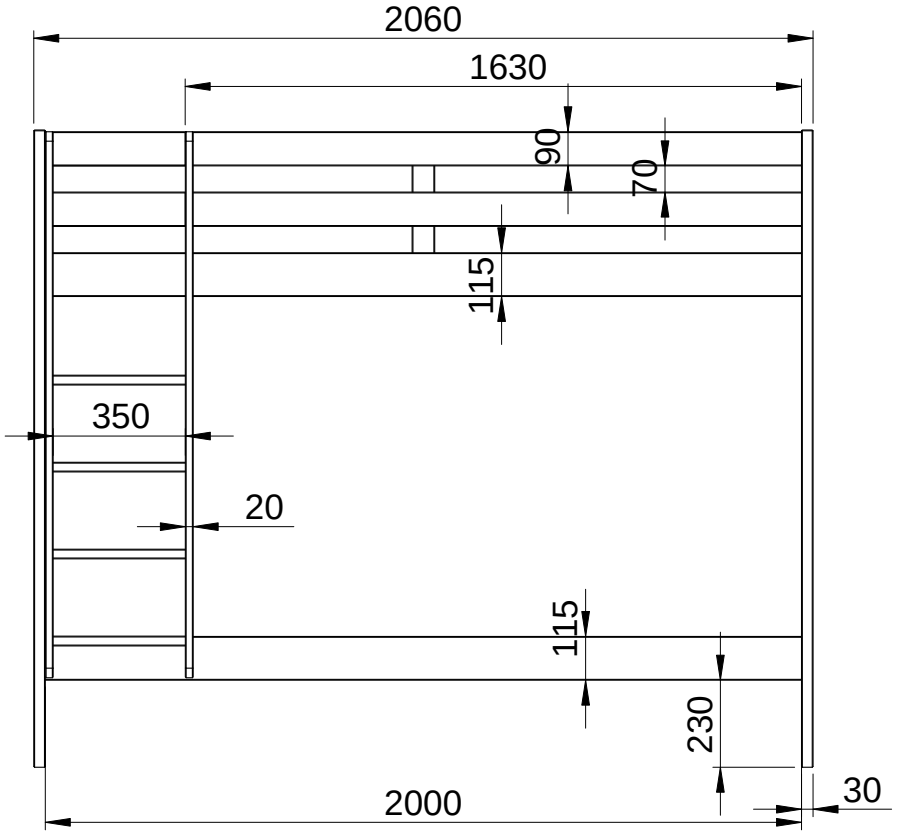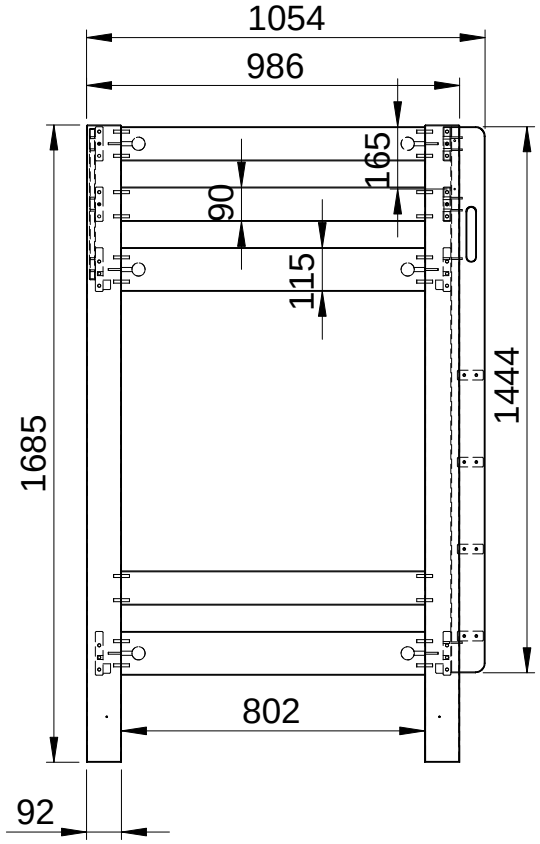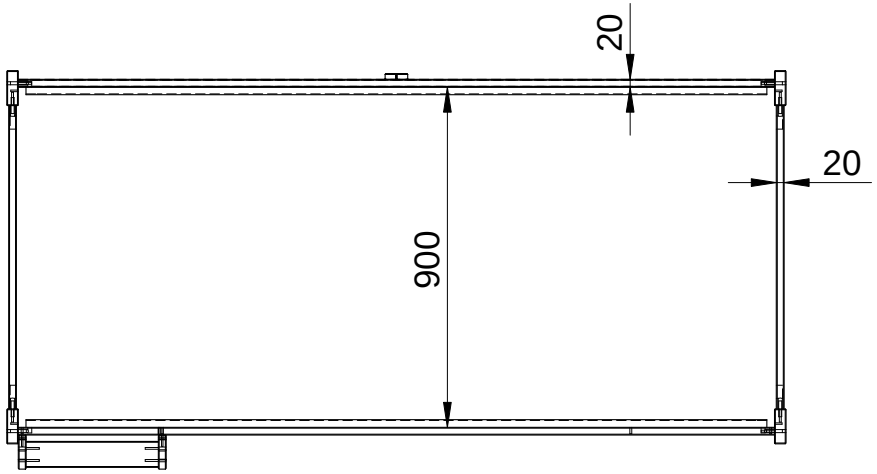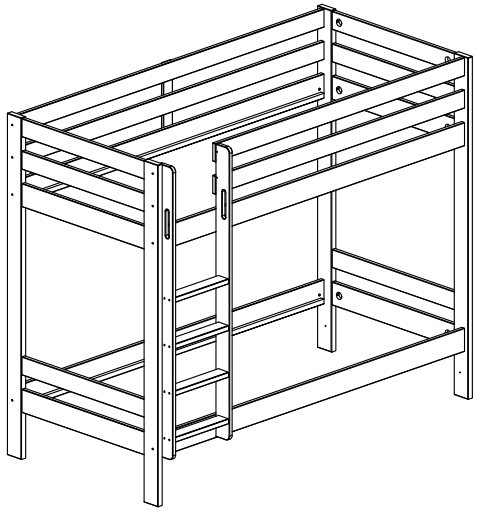NR961 MAX. MATTRESS 900X2000X228