SYNDEO

PCA Syringe Pump

User's Guide

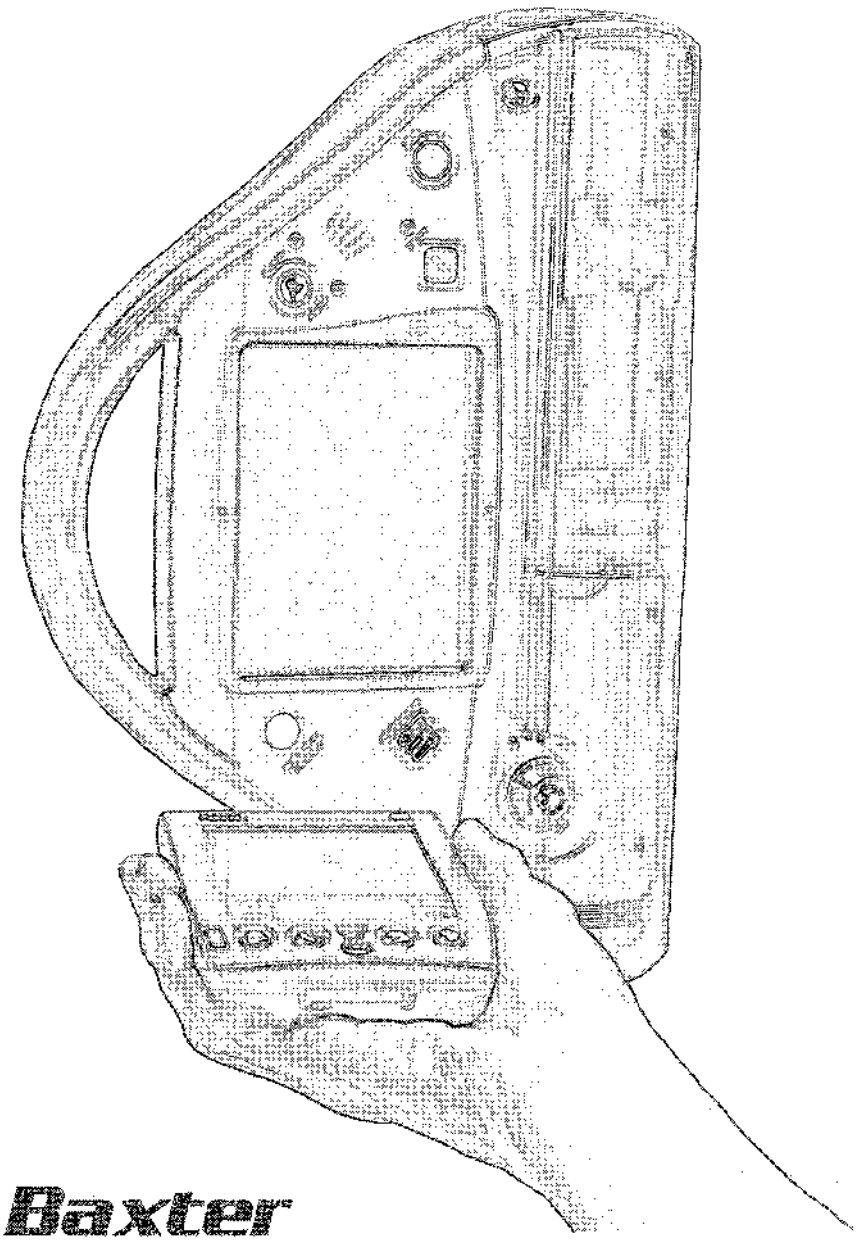

Baxter

Syndeo PCA Syringe Pump
User's Guide

Baxter

07-19-26-933

Warning

There are risks associated with using anything other than the recommended syringes and sets with this pump. Syringes and sets designated for use with this pump are identified in "Setting Up the Pump." Baxter's warranty on this pump will be null and void and Baxter will assume no responsibility for incidents that may occur if the product is not used in accordance with product labeling. Refer to "Introduction" for a list of warnings and cautions, as well as the applicable warnings and cautions that appear throughout this user's guide.

Disclaimer

The information in this document has been carefully examined and is believed to be entirely reliable. However, no responsibility is assumed for inaccuracies. Furthermore, Baxter reserves the right to make changes to any products herein to improve readability, function, or design. Baxter does not assume any liability arising out of the application or use of any product or circuit described herein; neither does it cover any license under its patent rights nor the rights of others.

Year 2000 Compliance

This product is Year 2000 Level C Compliant and will function as designed through 2037 without interruption or failure by the occurrence of dates prior to, during, or after Year 2000.

Documentation Copyrights

Duplication or distribution of this manual and any information contained within is strictly prohibited without the express written permission of Baxter. This manual and any information contained within may not be reproduced, distributed, or transmitted in any form or by any means, for any purpose, without the express written permission of Baxter. To order additional copies of this manual, or other related manuals, contact your local Baxter Healthcare Corporation representative.

Computer Software Copyrights

©2000 Baxter Healthcare Corporation. All rights reserved.

Patent Information

This pump is protected under one or more of the following U.S. and Foreign patents: United States: D474837. Foreign: Australia, 151612, 151613, 151637. Other U.S. and Foreign patents pending. Please refer to the pump patent label (located under the battery pack) for more information.

Trademark Information

Baxter and Syndeo are trademarks of Baxter International Inc.
Duracell is a trademark of the Gillette Company, its subsidiaries or affiliates.
B-D is a trademark of Becton, Dickinson and Company.
Monoject is a trademark of Sherwood Medical Company.

©Copyright 2000, Baxter Healthcare Corporation. All Rights Reserved.

Table of Contents

TABLE OF CONTENTS iii

INTRODUCTION 1

Safety Summary 1
Definitions 2
Warnings 2
Cautions 5

PUMP OVERVIEW 7

Buttons 8
Front Panel Lights 9
Display Screen 10
Keys 10
Battery Icon 13
Numeric Keypad 14
Audible Feedback 14

SETTING UP THE PUMP 17

Installing the D-Cell Alkaline Batteries 17
Attaching the Pump to the Pole 19
Attaching the PCA Button 21
Turning On the Pump 22
Power On Self Tests (POSTs) 23
Preparing the Tubing Set 23
Installing the Syringe 25

BASAL + PCA INFUSIONS 29

Basal + PCA Programmable Ranges 29
Programming a Basal + PCA Infusion 30

PCA ONLY INFUSIONS 37
PCA Only Programmable Ranges 37
Programming a PCA Only Infusion 38

CONTINUOUS ONLY INFUSIONS 45
Continuous Only Programmable Ranges 45
Programming a Continuous Only Infusion 46

PATIENT HISTORY 53
Transferring Patient History to a Handheld Personal Digital Assistant (PDA) or Printer 53

PREFERENCES 57
Adjusting the Brightness, Contrast, Tone Volume, and Clinician Password 57

ALERTS AND ALARMS 59
Alerts 59
Alarms 61
Service Codes 63

GLOSSARY 65

INDEX 69

Introduction

This user's guide provides the operating instructions for the Syndeo PCA Syringe Pump (product code 2L3113). It is a syringe-based pain management infusion pump.

The Syndeo PCA Syringe Pump is designed for the controlled delivery (continuous, intermittent, and continuous plus intermittent) of analgesic, sedative, and anesthetic solutions through clinically acceptable routes of administration, including intravenous, subcutaneous, spinal, epidural, and for regional anesthesia applications.

The Syndeo PCA Syringe Pump is appropriate for use in hospital or alternate medical site environments, but it is not intended for use in homecare settings.

The Syndeo PCA Syringe Pump is not indicated for use with blood or blood products.

The Syndeo PCA Syringe Pump is made in the USA or Singapore.

Safety Summary

Prior to operating this pump, the user should carefully read this manual to fully understand the functionality and to ensure safe and proper operation.

Only use this pump under the direction of trained medical professionals who are thoroughly familiar with this manual, including warnings, cautions, and instructions for use.

This manual is intended for clinicians only. DO NOT permit patients to have access to this manual. DO NOT disclose the pump's security code to patients.

Although this pump has been designed and manufactured to exacting specifications, it is not intended to replace trained personnel in the supervision of infusions.

Definitions

Attention, consult accompanying documents.

WARNING **Indicates a possible hazard which, if ignored, could result in severe personal injury or death.**

CAUTION Indicates a problem or unsafe practice which, if not avoided, could result in minor or moderate personal injury, or product or property damage.

Note: Provides supplemental information to the accompanying text.

Warnings

Note: Additional warnings appear throughout this user's guide, where appropriate.

WARNING **To ensure safe and proper operation, read the manual and any instructions accompanying disposables or accessories before operating the pump.**

WARNING **This pump should only be used with Baxter accessories specified in the "Setting Up the Pump" chapter of this manual. There are risks associated with using anything other than the recommended accessories with this pump.**

WARNING **Hospital and nursing protocols for the prescription and delivery of narcotic analgesic drugs, including the education, monitoring, and care of patients receiving such drugs, must be followed when dispensing narcotic analgesic drugs to patients using this device.**

! WARNING !

As with all medical electronic equipment, care must be exercised to avoid exposing this pump to powerful sources of electromagnetic interference. Using the pump near operating equipment which radiate high-energy radio frequencies (such as electrosurgical/cauterizing equipment, two-way radios, or cellular telephones) may cause false alarm conditions. If this happens, reposition the pump away from the source of interference.

! WARNING !

Patients receiving narcotic analgesic drugs with any patient-controlled analgesia (PCA) pump should be instructed in the proper use of the device. Instructions should include that only the patient or a licensed healthcare practitioner may operate the PCA button, unless the prescribing physician authorizes a lay caregiver to do so. Without physician authorization, operation of the device by all other persons is prohibited.

! WARNING !

Be sure to purge all air from syringe and infusion lines before administering any medication. Failure to follow this infusion procedure could precipitate serious injury and/or death.

! WARNING !

If the pump has been dropped or appears to be damaged, it should be taken out of service and inspected by qualified service personnel only.

! WARNING !

When disposing of this pump, batteries, or the syringes and administration sets designed for use with this pump, adhere to local regulations and guidelines.

! WARNING !

To help prevent medication errors, Baxter recommends that both the clinician programming the pump and another clinician check the accuracy of prescription and programming information before the infusion is started.

! WARNING !

This pump has not been evaluated for use within magnetic resonance imaging (MRI) or electrosurgical unit (ESU) environments, or with other medical equipment that emits radiation for diagnostic or therapeutic purposes.

! WARNING !

This pump is not intended for use on the inlet side of extracorporeal membrane oxygenation (ECMO) systems where high negative pressures can occur.

WARNING!

Epidural administration of drugs other than those indicated for epidural use could result in serious injury to the patient.

- **Epidural administration of anesthetics is limited to short term infusion (not to exceed 96 hours) with indwelling catheters specifically indicated for short-term anesthetic epidural drug delivery.**
- **Epidural administration of analgesics is limited to use with indwelling catheters specifically indicated for either short-term or long-term analgesic epidural drug delivery.**
- **To help prevent infusion of drugs not indicated for epidural use, do not use administration sets incorporating injection sites during epidural delivery.**
- **Clearly distinguish pumps used for epidural drug delivery from pumps used for other routes of administration.**

WARNING!

Narcotics and drugs approved for epidural administration should be administered by or under the direction of a physician experienced in the technique of epidural administration and who is thoroughly familiar with the drug labeling. It should be administered only in settings where adequate patient monitoring is possible. Resuscitative equipment and a specific antagonist (Naloxone injection) should be immediately available for the management of respiratory depression as well as complications which might result from inadvertent intrathecal or intravascular injection. *Patient monitoring should be continued for at least 24 hours after each dose, since delayed respiratory depression may occur.*

Proper placement of a needle or catheter in the epidural space should be verified before drug infusion is started.

! WARNING !

Narcotics and drugs approved for intrathecal administration should be administered by or under the direction of a physician experienced in the technique of intrathecal administration and who is thoroughly familiar with the drug labeling. It should be administered only in settings where adequate patient monitoring is possible. Resuscitative equipment and a specific antagonist (Naloxone injection) should be immediately available for the management of respiratory depression as well as complications which might result from inadvertent intravascular injection. *Patient monitoring should be continued for at least 24 hours after each dose, since delayed respiratory depression may occur. Respiratory depression (both early and late onset) has occurred more frequently following intrathecal administration than epidural administration.*

Cautions

Note: Additional cautions appear throughout this user's guide, where appropriate.

CAUTION

In the U.S., use of this pump is restricted by federal law (USA) to sale or use by, on the order of, or under the supervision of a physician or other licensed health care professional.

CAUTION

This pump is electronic medical equipment and should be handled with care.

CAUTION

Use only accessory equipment complying with the pump's safety requirements. Failure to do so may lead to reduced safety levels of the resulting system. Consideration relating to accessory choice shall also include:

- Use of the accessory in the patient vicinity.
- Evidence the safety certification of the accessory has been performed in accordance with the appropriate UL 2601-1 and/or IEC 60601-1-1 harmonized national standard.

CAUTION

To reduce the risk of electric shock, do not remove the pump's housing. Refer servicing to authorized service personnel.

CAUTION

NEVER use the pump and pole as a patient support.

CAUTION Do not use hard or sharp objects on the keypad display screen.

CAUTION Do not operate this infusion pump in the presence of flammable anesthetics, ether, oxygen-enriched, or explosive atmospheres.

CAUTION Do not expose the pump to X-rays, gamma rays, or other ionizing radiation, or to strong electric or magnetic fields.

CAUTION This pump may interact with some ECG monitoring equipment during infusions. Proper set up of the ECG monitor should eliminate any difficulties. Consult the ECG monitor instruction manual for more information.

CAUTION The operator should verify that the pump's settings are appropriate for the clinical application.

CAUTION Wipe off spills immediately. Do not allow fluid or residue to remain on the pump.

CAUTION Follow the cleaning schedule and methods as defined in the "Routine Maintenance" chapter of the *Syndeo PCA Syringe Pump Technical Specifications* to ensure proper maintenance of the pump.

CAUTION Routine checks and maintenance procedures, as well as periodic calibration verifications, must be performed so that patients receiving infusions can be assured of accurate trouble-free operation.

CAUTION Refer all service, repair, and calibration to authorized technical personnel.

Pump Overview

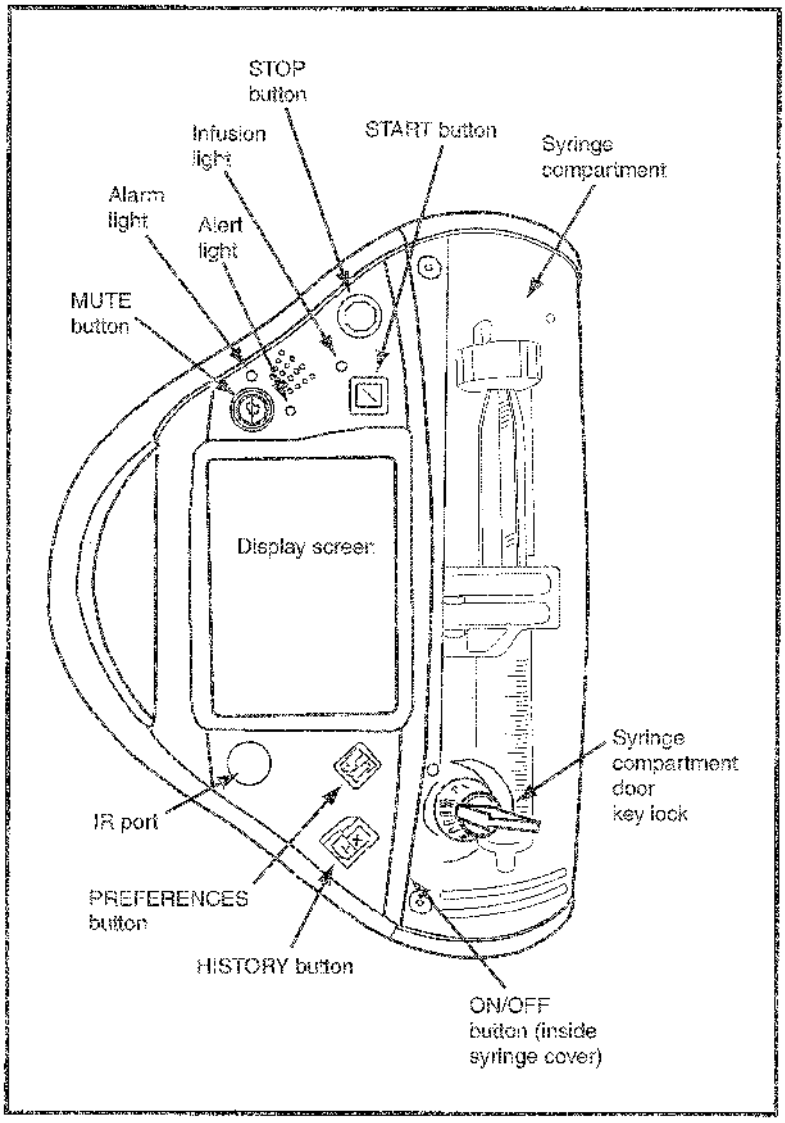

Figure 1

Buttons

START, STOP, PREFERENCES, HISTORY, and MUTE are located on the front panel. ON/OFF is located inside and at the bottom of the syringe compartment.

Note: Button names appear in all capital letters in this manual (for example, "press the START button" or "press START").

ON/OFF

- Press to turn on the pump.
- Press and hold for approximately two seconds to turn off the pump.

START

- Starts or restarts a prime, an infusion, a loading dose, or a clinician bolus.

STOP

- Stops a prime, an infusion, a PCA dose, a loading dose, or a clinician bolus.

Note: The pump will stop if the battery pack is removed.

PREFERENCES

- Views or changes the pump options, such as screen brightness, alarm volume, etc.

HISTORY

- Views the detailed patient infusion history.

MUTE

- Temporarily silences the alarm and alert tones.

Front Panel Lights

INFUSION (green)

- This light flashes when the pump is running an infusion.
- It is off when the infusion has stopped.
- It is off when the pump is in an alarm or service code.
- It is on during power on self tests (POSTs) and power on self test failures.

ALERT (yellow)

- This light flashes slowly when the pump is on but not running an infusion.
- It flashes quickly during an alert.
- It is on during power on self tests and power on self test failures.

ALARM (red)

- This light flashes during an alarm.
- It is on during service codes.
- It is on during power on self tests and power on self test failures.

Display Screen

To conserve battery life, the display screen "sleeps" or goes blank after one minute without user interaction. (The longer the display screen stays on and the brighter the display screen setting, the quicker the battery power will deplete.) To "wake up," simply touch the display screen.

Note: Screen titles appear in quotation marks in this manual (for example, touching the screen will advance the pump to "Load Syringe.")

Keys

Note: Key names appear in all capital letters in this manual (for example, "press the ENTER key" or "press ENTER."

Keys are located on the display screen, and are used to move up and down through lists, as well as start or stop a process. A key press is accepted *after* the release of the key.

ENTER
- Selects an item, then moves to the next associated screen.

UP
- Moves the highlight bar to the next position.

DOWN
- Moves the highlight bar to the next position.

PAGE UP
- Moves backward through long lists of items.

PAGE DOWN
- Moves forward through long lists of items.

CLEAR or CLEAR Rx
- Clears data or prescription information.

YES
- Provides an affirmative answer to a screen prompt.

NO
- Provides a negative answer to a screen prompt.

BACK
- Takes the user to the preceding screen.

CANCEL
- Cancels choices and displays the previous screen.

OKAY
- Takes the user to the next screen.

CONFIRM RX OKAY
- Confirms the prescription and takes the user to the next screen.

PLUS
- Increases values, such as screen brightness or tone volume.

MINUS
- Decreases values, such as screen brightness or tone volume.

CLINICIAN BOLUS
- Takes the user to the "Enter Clinician Bolus" screen.

STANDBY
- Retains the programmed prescription in the pump's memory for future use.

WAKE
- "Wakes up" the pump after the STANDBY key has been pressed.

EDIT RX
- Takes the user to the screen that will allow prescription information editing.

OPTIONS
- Accesses the "UPLOAD" and "PRINT" keys.

UPLOAD
- Transfers the pump information to an optional PDA.

PRINT
- Transfers the pump information to an optional IR printer.

Battery Icon

The battery icon indicates the *approximate* charge state, which may vary depending on how the pump is used.

- Three bars displayed indicate approximately 80% or more capacity.

- Two bars displayed indicate more than 50% but less than 80% capacity.

- One bar displayed indicates more than 20% but less than 50% capacity.

- A white flashing battery indicates less than 20% capacity and that **the batteries should be changed immediately.**

Numeric Keypad

Press the numeric and decimal point keys to input data.

Audible Feedback

Note: When the user presses an "open area" of the display screen, no tone will sound.

Alert	• Produces a three-tone sound when an alert is active and has not been muted.
Alarm	• Produces a four-tone sound when an alarm is active and has not been muted. **Note:** The "Batteries Depleted" alarm tone cannot be muted.
Valid key press	• Produces a "high" tone when a valid button or key press is made.
Invalid key press	• Produces a "low" tone when an invalid button or key press is made.
Enabled dose tone	• There is no tone difference between a valid or an invalid PCA button press.
Disabled dose tone	• A three-tone sound is heard upon a valid PCA button press. • A "low" tone is heard upon an invalid PCA button press.

Back of the Pump

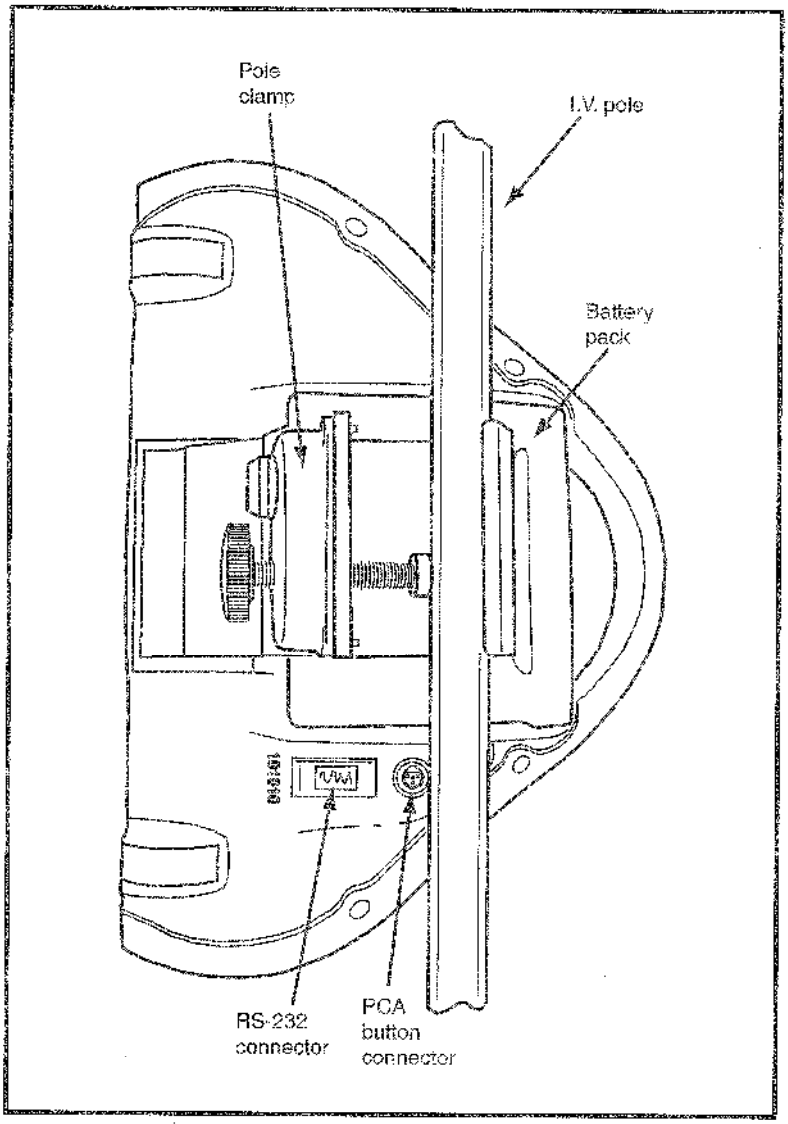

Figure 2

Setting Up the Pump

Installing the D-Cell Alkaline Batteries

Note: When installing or replacing batteries, always insert four new batteries. Always use Duracell (MN1300) or Duracell ProCell (PC1300) D-cell alkaline batteries. The use of other alkaline battery brands may impact this product's battery life statements. Refer to "Specifications, Power" in the *Technical Specifications* for battery date coding information.

Note: After changing the batteries, the pump will allow the user to continue the previous infusion *if it is restarted within one hour.*

1. Refer to Figure 3. Press and hold the battery pack release button. Then, slide the battery pack out of the pump. You may want to use both hands (one to steady the pack) when removing the battery pack. Use care not to pinch your fingers or drop the battery pack.

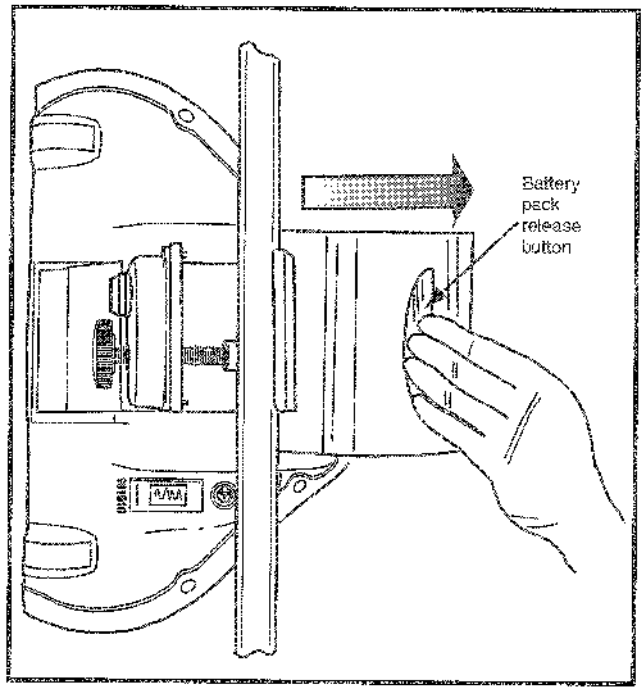

Figure 3

2. To open the battery pack, turn the knob on the back of the battery pack (refer to Figure 4) counterclockwise. Remove the battery pack cover.
3. Remove the batteries by carefully turning the battery pack upside down over a suitable container.
4. Insert four D-cell alkaline batteries as indicated by the diagrams in the battery pack base, or refer to Figure 4. Make sure that the batteries fully contact the terminals in the battery pack.

CAUTION To prevent electrical shock, use care when inserting the batteries. Batteries should not come into contact with metal or wet surfaces.

CAUTION For proper pump functionality, observe the correct polarity when installing the batteries.

5. Replace the battery pack cover.
6. Secure the battery pack cover in place by turning the knob clockwise.
7. Slide the battery pack into the pump until you hear it "click" into place.

Note: The pump will stop if the battery pack is removed.

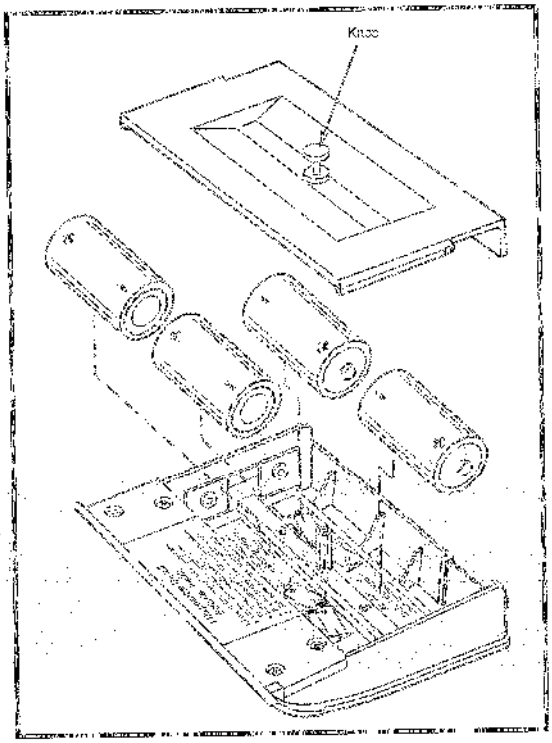

Figure 4

Attaching the Pump to the Pole

! WARNING ! **When attaching the pump to an IV pole, ensure that it has been securely clamped.**

! WARNING ! **To avoid personal injury, ensure that the IV pole is stable and secure. Ensure that the pole is able to support the pump, along with any other devices, without tipping or falling. Do not overload the pole. The pole diameter should be between 3/8" and 1 1/2" (0.95 cm and 3.81 cm).**

CAUTION Ensure that the pump is mounted where the syringe compartment is accessible and administration sets can be loaded without being stretched or kinked.

CAUTION When attaching the pump to an IV pole, use care not to pinch your fingers while tightening the pole clamp.

Note: The pump should only be carried by the handle.

Note: Care should be taken to avoid impact with other objects.

1. Refer to Figure 5. Position the pole clamp around the pole.
2. Tighten the pole clamp knob until the pump is secured to the pole.
3. To lock the pole clamp, insert the key into the lock, then push in and rotate clockwise.

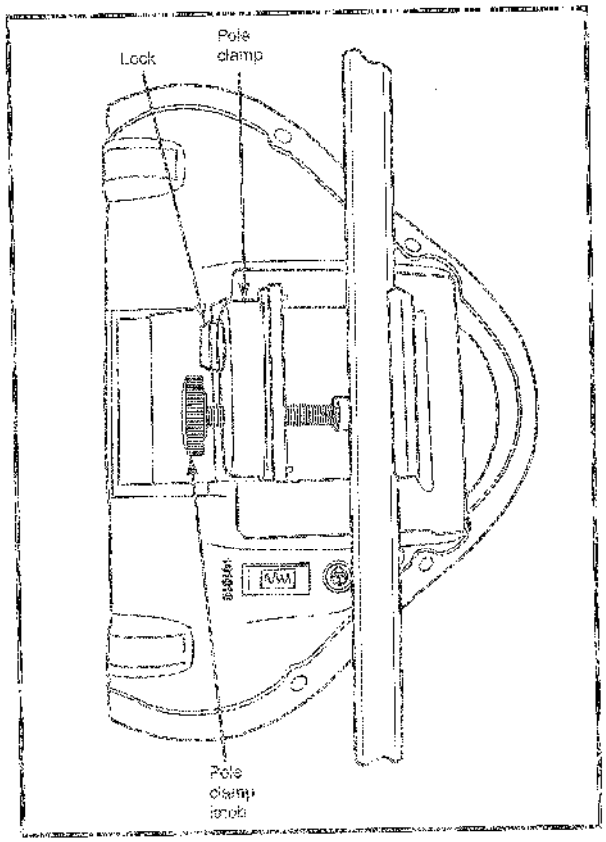

Figure 5

Attaching the PCA Button

1. Align the connector pins and socket. Then, insert the plug into the socket with the black button facing outward (refer to Figure 6).
2. To detach the PCA button, press and hold the black button on the side of the plug and pull it from the pump.

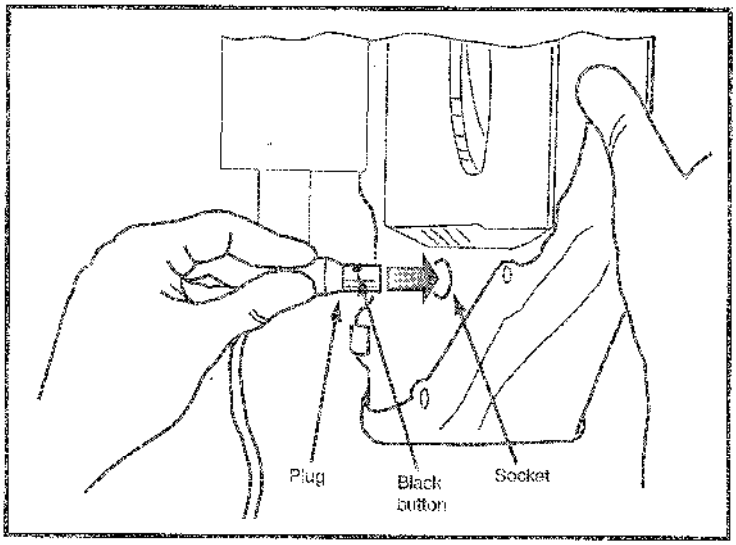

Figure 6

Turning On the Pump

The ON/OFF button is located inside the syringe compartment (refer to Figure 7).

1. Unlock the syringe compartment door by pressing in and turning the syringe compartment key counterclockwise. Then, open the syringe compartment door.
2. Press the ON/OFF button to turn on the pump.

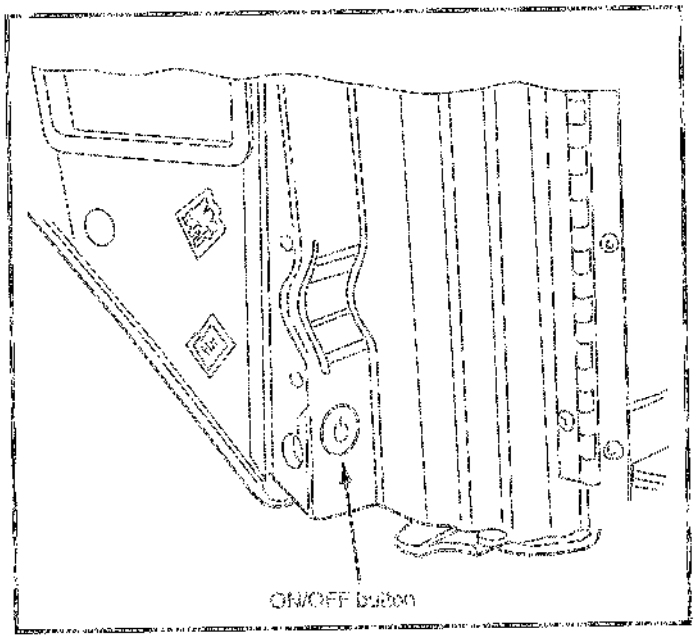

Figure 7

Power On Self Tests (POSTs)

Note: To verify that the operator is authorized to use the pump, a key will be required during the power on self test.

After the pump is turned on it goes through a series of self tests. These tests verify the proper operation of the pump. This is what you should see:

- The alarm (red), alert (yellow), and infusion (green) lights briefly turn on.
- The display screen turns white.
- The display screen turns black.
- The buzzer sounds.
- Three different tones sound from the speaker.

In the event of a POST failure, the red light will go on and a tone will sound. Turn the pump off and back on. If the error code or malfunction recurs, do not use the pump and contact authorized service personnel immediately.

Preparing the Tubing Set

! WARNING ! **Do not connect the administration set to the patient when priming.**

! WARNING ! **Always read and follow the instructions that accompany the syringe and administration sets you are using. Carefully follow the instructions for attaching the set to the syringe. Set use should not exceed the label set change interval.**

! WARNING ! **Always close the clamp on the administration set before loading or removing the syringe.**

! WARNING ! **Before starting the infusion, visually verify that no air is in the set or syringe.**

Note: Connections of this pump to the same patient line with other infusion systems or accessories may alter the system performance. Consult the infusion system or accessory manufacturer's instructions for use before proceeding. Outside the U.S.: Read document VDE0753-5 when performing parallel infusions.

Note: Call the Product Information Center (1-800-933-0303) if you have any questions regarding the appropriate sets to use with this pump.

Recommended Sets

It is a requirement of Baxter Healthcare Corporation that its syringe PCA pumps only be used with PCA sets that contain anti-siphon technology. The Baxter Anesthesia PCA sets containing integral anti-siphon technology are as follows:

Baxter Product Description	Product Code
Tamper Resistant Anti-Siphon PCA Extension Set, length 60"	2C9205
Tamper Resistant Anti-Siphon PCA Extension Set, length 96"	2C9206
Anti-Reflux PCA Y-Set, length 8"	2L3506
Tamper Resistant Anti-Siphon PCA Combination Set, length 101"	2L3507
Anti-Siphon PCA Extension Set, length 98"	2L3508
Anti-Siphon PCA Combination Set, length 102"	2L3509
Air-Eliminating Epidural Extension Set (with 0.22 micron filter), length 98"	2C9942
Epidural Extension Set, length 96"	2C9943

Attaching the Set

Attach the set to the syringe following the instructions on the tubing set package.

Installing the Syringe

! WARNING ! **Whenever a toxic or dangerous level of drug is stored in the syringe, constant monitoring of the infusion is required.**

! WARNING ! **Use caution when selecting the drugs intended to be delivered via the infusion pump. If the drug contained in the syringe will be exposed to extreme environmental conditions for prolonged time periods, IT IS IMPORTANT TO SELECT DRUGS THAT WILL NOT CHANGE PHARMACOLOGICALLY UPON SUCH EXPOSURE.**

Note: Syringes are intended for single use only. Dispose of used syringes properly.

Note: Call the Product Information Center (1-800-933-0303) if you have any questions regarding the appropriate syringes to use with this pump.

Recommended Syringes

! WARNING ! **Use of other syringes and sizes may cause incorrect flow rates and dosages, and may cause damage to the pump.**

! WARNING ! **It is the user's responsibility to determine the syringe type. Otherwise, an unsafe condition may occur.**

Syringe	Volume
MONOJECT	60 mL
B-D	60 mL
Baxter prefilled glass syringe (Morphine Sulfate, 1:1) Product code: 2L3000 (with needle guard)	50 mL
Baxter prefilled glass syringe (Meperidine HCL, 10:1) Product code: 2L300 (with needle guard)	50 mL
Baxter prefilled glass syringe (Morphine Sulfate, 5:1) Product code: 2L3003 (with needle guard)	50 mL

1. Unlock and open the syringe compartment door.
2. Turn on the pump.

CAUTION **DO NOT load a syringe before the power up screen appears.**

3. Refer to Figure 8. Fully squeeze the pusher block lever against the stop (refer to Figure 10). Then, slide the pusher block as far as possible to the top.

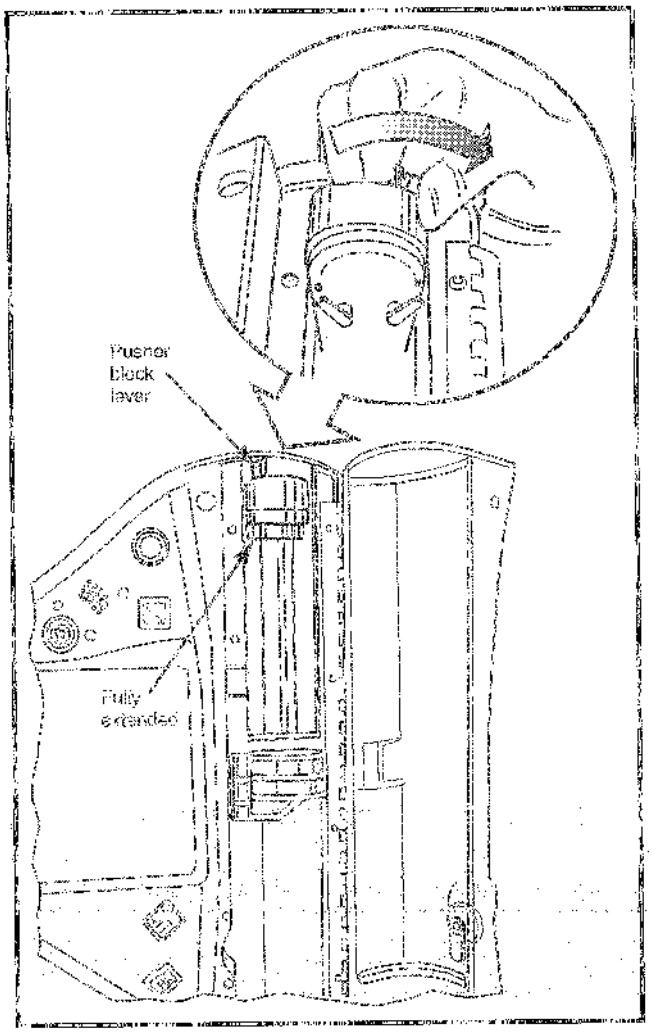

Figure 8

4. Slide the syringe barrel beneath the barrel clamp (refer to Figure 9). Do not pull forward on the barrel clamp.

Note: Ensure that the graduation lines on the syringe face you.

5. The syringe is properly installed when the syringe flange rests in the slot of the syringe compartment base (refer to Figure 9, inset).

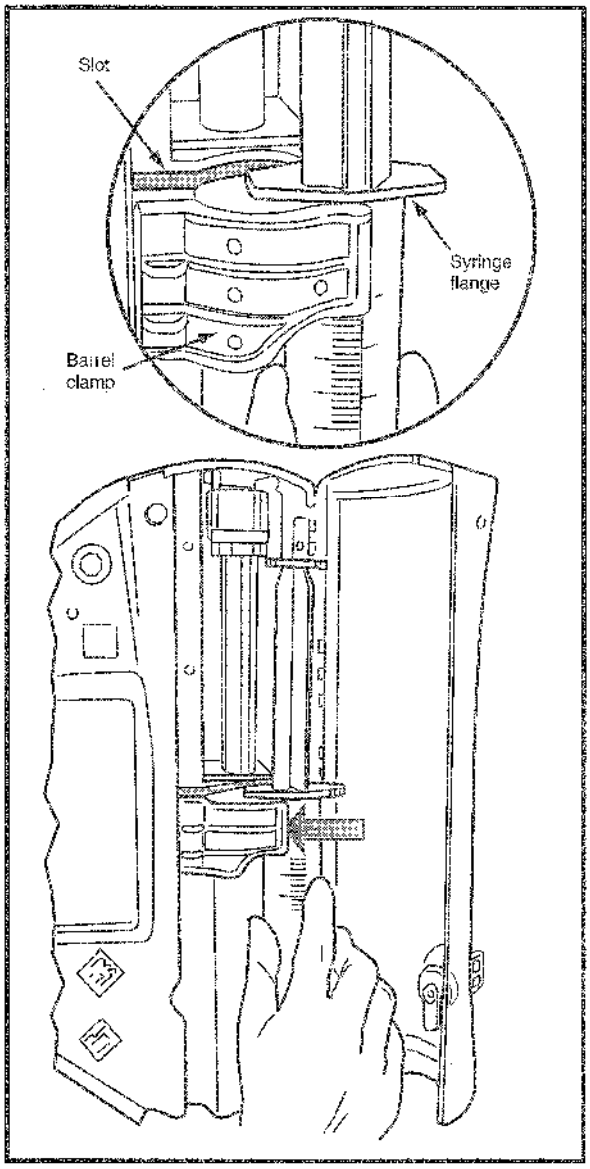

Figure 9

6. Fully squeeze the pusher block lever against the stop. Carefully move the pusher block until it contacts the syringe plunger (refer to Figure 10). Release the pusher block lever to secure the syringe plunger.

Note: Ensure that both plunger retainers capture the syringe plunger (refer to Figure 10).

7. Close the syringe compartment door. Then, lock the syringe compartment door by pressing in and turning the syringe compartment key clockwise.

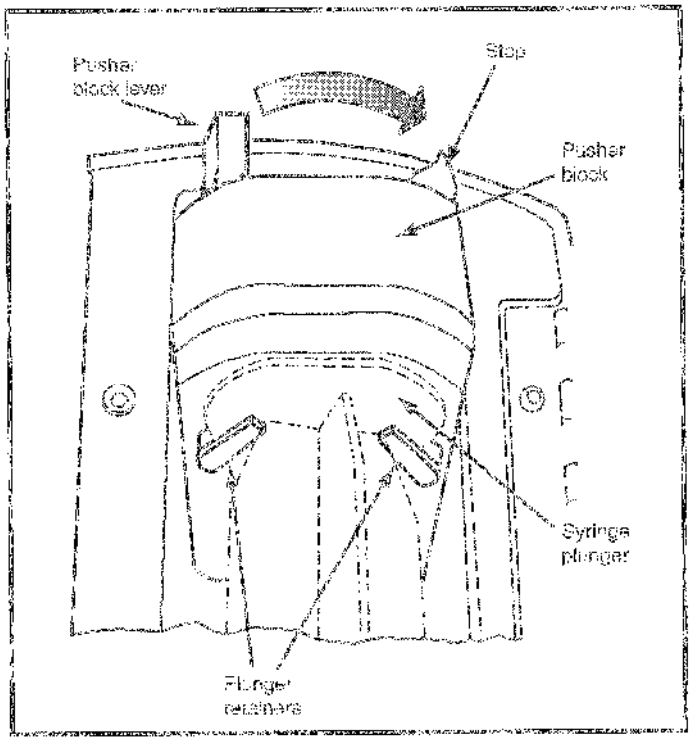

Figure 10

Basal + PCA Infusions

Basal + PCA Programmable Ranges

PCA dose rate	150 mL/hr
Loading dose rate	150 mL/hr
Clinician bolus rate	150 mL/hr
Basal rate range	0.0 mL/hr to 9.9 mL/hr in 0.1 mL/hr increments
PCA dose volume range	0.1 mL to 9.9 mL in 0.1 mL increments
Loading dose volume range	0.1 mL to 9.9 mL in 0.1 mL increments
Clinician bolus dose volume range	0.1 mL to 9.9 mL in 0.1 mL increments
Priming rate	150 mL/hr
Priming volume	0.5 mL per START button press
Lockout time range	3 minutes to 240 minutes **Note:** The lockout time begins when the PCA bolus is completed OR upon restart if the lockout time has been modified. Lockout timing is not affected by clinician boluses.
Concentration ranges	• 0.1 mg/mL to 99.9 mg/mL in 0.1 mg/mL increments • 1 MCG/mL to 999 MCG/mL in 1 MCG/mL increments

Programming a Basal + PCA Infusion

Note: When available, press BACK during programming to return to the previous screen.

Note: An audible tone confirms each request for a dose.

Note: When the syringe is removed and a new syringe is installed, the pump will go to either the "Confirm Syringe" or "Syringe Selection" screen.

Note: Any calculated values are rounded to the nearest least significant digit of precision. For example, if the precision is 0.1, a calculated value of 25.75 rounds to 25.8. A calculated value of 25.74 rounds to 25.7.

Note: When an infusion is initiated there can be a delay, especially at low flow rates, before the pressure on the syringe plunger takes up the slack in the system and applies enough pressure to overcome the initial resistance of the plunger in the syringe itself. Software in the pump has been designed to minimize this delay before solution delivery actually begins.

Note: The pump's post occlusion bolus reduction feature is designed to reduce the amount of medication that could be inadvertently administered to the patient after the removal of an occlusion during infusion. The pump's motor runs backwards slightly after an occlusion is detected to relieve the pressure that builds up in the system. This enables the pump to relieve accumulated pressure caused by an occlusion that would result in a larger-than-intended bolus of medication to be delivered upon removal of the occlusion.

Note: If a patient request is made by pressing the PCA button before the lockout time has elapsed, the attempt is recorded but no injection is given.

Note: The default clinician password for security codes is "123." However, this password can be customized. Refer to *User Identifier* in "Preferences" for more information.

Note: The following is a list of all possible programming screens, not necessarily the order of the screens as shown when programming the pump.

The Display Screen Says:	Basal + PCA Infusion Programming Description
! WARNING !	**To help prevent medication errors, Baxter recommends that both the clinician programming the pump and another clinician check the accuracy of prescription and programming information before the infusion is started.**
"Power Up Complete"	Review the date and time information. • Press YES if the date/time information is correct. • Press NO if the date/time information is incorrect. This will advance the pump to the numeric keypad, where the correct date/time information can be entered.
"Lock Cover/ Unlock Cover"	Follow the screen prompts, which will prompt you to either unlock/lock or lock/unlock the syringe compartment door. **Note:** This step verifies that the operator is authorized to use the pump.
"Resume Therapy"	If the pump was turned off during an infusion: • Press YES to resume the programmed infusion. This will take the pump to "Confirm Syringe." **Note:** You have up to **one hour** after the pump is turned off to resume the infusion. • Press NO to cancel the infusion. This will take the pump to "Patient History."
"Patient History"	• Press YES to clear the patient history. **Note: Once YES is pressed, all patient history is deleted. If you wish to upload the patient history to either a printer or PDA, press the HISTORY button.** • Press NO if you do not want to clear the history. This will return the pump to "Resume Therapy."
"Load Syringe"	Load the syringe.

The Display Screen Says:	Basal + PCA Infusion Programming Description
"Confirm Syringe"	• Press YES if the syringe indicated on the screen is the same as the syringe that is loaded. This will take the pump to "Prime Pump (0.5 mL Increments)." • Press NO if the syringe indicated on the screen is not the same as the syringe that is loaded. This will take the pump to "Syringe Selection."
"Syringe Selection"	1. Press UP or DOWN to scroll to the desired syringe. 2. Press ENTER to select the syringe and return the pump to "Confirm Syringe." Note: If no syringe is loaded, "Load Syringe" will display.
"Prime Pump (0.5 mL Increments)"	• Press YES if you want to prime the set. • Press NO if you do not want to prime the set. This will advance the pump to "Mode Selection."
WARNING!	**Make sure the pump is disconnected from the patient infusion site while priming!**
"Lock Cover to Prime"	Before priming, close and lock the syringe compartment door.
"Prime Pump (0.5 mL Increments)"	• Press the START button to prime the set (0.5 mL per press). • Press the STOP button to stop priming the set.
"Prime Pump (0.5 mL Increments)"	• Press YES if priming is complete. • Press NO if you wish to prime an additional 0.5 mL. Note: The maximum prime volume per syringe is 5 mL.
"Mode Selection"	Press BASAL + PCA to program a basal + PCA infusion.
"Drug Units Selection"	Note: This screen will not appear if the pump is configured for only one unit. Press mL (milliliters), mg (milligrams), or MCG (micrograms) to select the desired units.
"Confirm Drug Units"	• Press YES if the unit selected is correct. • Press NO if the unit selected is incorrect. This will return the pump to "Drug Units Selection."

The Display Screen Says:	Basal + PCA Infusion Programming Description
"Set Concentration"	**Note:** This screen appears if either mg or MCG was selected. **Note:** The concentration range is noted at the top of the screen. 1. Use the numeric keypad to enter numbers and the decimal. 2. Press ENTER to go to "Confirm Concentration."
"Confirm Concentration"	• Press YES if the concentration is correct and go to "Set PCA Dose." • Press NO if the concentration selected is incorrect. This will return the pump to "Set Concentration."
"Set PCA Dose"	**Note:** The dose range is noted at the top of the screen. 1. Use the numeric keypad to enter numbers and the decimal. 2. Press ENTER to go to "Set Lockout."
"Set Lockout"	**Note:** The lockout range is noted at the top of the screen. **Note:** The lockout time begins when the PCA bolus is completed OR upon restart if the lockout time has been modified. Lockout timing is not affected by clinician boluses. 1. Use the numeric keypad to enter the minutes. 2. Press ENTER to go to "Set Basal Rate."
"Set Basal Rate"	**Note:** The basal rate range is noted at the top of the screen. 1. Use the numeric keypad to enter numbers and the decimal. 2. Press ENTER to go to "Set 1 or 4 Hour Limit."
"Set 1 or 4 Hour Limit"	**Note:** This is either one hour or four hours, depending on how the pump was configured in advanced setup. 1. Use the numeric keypad to enter numbers and the decimal. 2. Press ENTER to go to "Verify Prescription."

The Display Screen Says:	Basal + PCA Infusion Programming Description
"Verify Prescription"	Review the programmed basal + PCA infusion. If a change must be made: • Press UP or DOWN to scroll to the desired parameter. • Press ENTER to select the parameter and return to its programming screen. • Press OKAY to go to "Confirm Prescription." • Press CLEAR RX to return the pump to "Mode Selection."
"Confirm Prescription"	Verify the programmed basal + PCA infusion information (this is the second clinician verification). • Press OKAY to go to "Loading Dose." • Press STANDBY to retain the programmed infusion in the pump's memory for future use. • Press EDIT RX to return the pump to "Verify Prescription" to change the prescription.
"Loading Dose"	• Press YES to go to "Set Loading Dose." • Press NO to go to "Start Infusion."
"Set Loading Dose"	**Note:** The loading dose range is noted at the top of the screen. 1. Use the numeric keypad to enter numbers and the decimal. 2. Press ENTER to go to "Confirm Loading Dose."
"Confirm Loading Dose"	Review the loading dose information that you have entered. • Press OKAY to go to "Start Infusion."
"Start Infusion"	Press the START button to begin the loading dose infusion.
"Loading Dose Infusing"	Press the STOP button to stop the loading dose infusion and go to "Loading Dose Interrupted."
"Loading Dose Interrupted"	• Press the START button to restart the loading dose infusion. • Press OKAY to cancel the loading dose and go to "Start Infusion." **Note:** If the pump is on manual start, press the START button to begin the infusion.
"Loading Dose Complete"	Press OKAY to go to "Start Infusion."

The Display Screen Says:	Basal + PCA Infusion Programming Description
"Start Infusion"	• Press the START button to begin the infusion. • Press EDIT RX to go to the "Enter the Code" screen to change the prescription.
"Basal + PCA"	The basal + PCA infusion is in progress. • Press the STOP button to stop the infusion.
"Infusion Stopped"	• Press the START button to restart the infusion. • Press EDIT RX to go to the "Enter the Code" screen to change the prescription. • Press CLINICIAN BOLUS to go to the "Enter the Code" screen to program the clinician bolus.
"Enter the Code"	1. Use the numeric keypad to enter the clinician password. 2. Press ENTER.
"Edit Prescription"	**Note:** Units and concentration cannot be edited. Review the programmed information. 1. Press UP or DOWN to scroll to the desired parameter. 2. Press ENTER to select the parameter. 3. Use the numeric keypad to enter numbers and the decimal. **Note: You will need to enter a new PCA limit.** 4. Press OKAY to go to "Confirm Prescription."
"Confirm Prescription"	• Press OKAY to go to "Infusion Stopped." • Press STANDBY to retain the programmed infusion in the pump's memory for future use. • Press EDIT RX to change the prescription.
"Set Clinician Bolus"	1. Use the numeric keypad to enter numbers and the decimal. 2. Press ENTER to go to "Confirm Bolus."
"Confirm Bolus"	Press OKAY to confirm the clinician bolus.
"Start Infusion"	Press the START button to begin the clinician bolus.
"Infusing"	• Press the STOP button to stop the clinician bolus infusion and go to "Bolus Interrupted."

The Display Screen Says:	Basal + PCA Infusion Programming Description
"Bolus Interrupted"	• Press the START button to restart the clinician bolus infusion. • Press OKAY to cancel the clinician bolus infusion and proceed to the main infusion. If the pump is on manual start, press the START button to begin the infusion. Note: If the pump is on manual start, press the START button to begin the infusion.
"Bolus Complete"	Press OKAY to return to "Infusion Stopped."

PCA Only Infusions

PCA Only Programmable Ranges

PCA only dose rate	150 mL/hr
Loading dose rate	150 mL/hr
Clinician bolus rate	150 mL/hr
PCA only dose volume range	0.1 mL to 9.9 mL in 0.1 mL increments
Loading dose volume range	0.1 mL to 9.9 mL in 0.1 mL increments
Clinician bolus dose volume range	0.1 mL to 9.9 mL in 0.1 mL increments
Priming rate	150 mL/hr
Priming volume	0.5 mL per START button press
Lockout time range	3 minutes to 240 minutes **Note:** The lockout time begins when the PCA bolus is completed OR upon restart if the lockout time has been modified. Lockout timing is not affected by clinician boluses.
Concentration ranges	• 0.1 mg/mL to 99.9 mg/mL in 0.1 mg/mL increments • 1 MCG/mL to 999 MCG/mL in 1 MCG/mL increments

Programming a PCA Only Infusion

Note: When available, press BACK during programming to return to the previous screen.

Note: An audible tone confirms each request for a dose.

Note: When the syringe is removed and a new syringe is installed, the pump will go to either the "Confirm Syringe" or "Syringe Selection" screen.

Note: Any calculated values are rounded to the nearest least significant digit of precision. For example, if the precision is 0.1, a calculated value of 25.75 rounds to 25.8. A calculated value of 25.74 rounds to 25.7.

Note: When an infusion is initiated there can be a delay, especially at low flow rates, before the pressure on the syringe plunger takes up the slack in the system and applies enough pressure to overcome the initial resistance of the plunger in the syringe itself. Software in the pump has been designed to minimize this delay before solution delivery actually begins.

Note: The pump's post occlusion bolus reduction feature is designed to reduce the amount of medication that could be inadvertently administered to the patient after the removal of an occlusion during infusion. The pump's motor runs backwards slightly after an occlusion is detected to relieve the pressure that builds up in the system. This enables the pump to relieve accumulated pressure caused by an occlusion that would result in a larger-than-intended bolus of medication to be delivered upon removal of the occlusion.

Note: If a patient request is made by pressing the PCA button before the lockout time has elapsed, the attempt is recorded but no injection is given.

Note: The default clinician password for security codes is "123." However, this password can be customized. Refer to *User Identifier* in "Preferences" for more information.

Note: The following is a list of all possible programming screens, not necessarily the order of the screens as shown when programming the pump.

The Display Screen Says:	PCA Only Infusion Programming Description
! WARNING !	**To help prevent medication errors, Baxter recommends that both the clinician programming the pump and another clinician check the accuracy of prescription and programming information before the infusion is started.**
"Power Up Complete"	Review the date and time information. • Press YES if the date/time information is correct. • Press NO if the date/time information is incorrect. This will advance the pump to the numeric keypad, where the correct date/time information can be entered.
"Lock Cover/ Unlock Cover"	Follow the screen prompts, which will prompt you to either unlock/lock or lock/unlock the syringe compartment door. **Note:** This step verifies that the operator is authorized to use the pump.
"Resume Therapy"	If the pump was turned off during an infusion: • Press YES to resume the programmed infusion. This will take the pump to "Confirm Syringe." **Note:** You have up to **one hour** after the pump is turned off to resume the infusion. • Press NO to cancel the infusion. This will take the pump to "Patient History."
"Patient History"	• Press YES to clear the patient history. **Note: Once YES is pressed, all patient history is deleted. If you wish to upload the patient history to either a printer or PDA, press the HISTORY button.** • Press NO if you do not want to clear the history. This will return the pump to "Resume Therapy."
"Load Syringe"	Load the syringe.

The Display Screen Says:	PCA Only Infusion Programming Description
"Confirm Syringe"	• Press YES if the syringe indicated on the screen is the same as the syringe that is loaded. This will take the pump to "Prime Pump (0.5 mL Increments)." • Press NO if the syringe indicated on the screen is not the same as the syringe that is loaded. This will take the pump to "Syringe Selection."
"Syringe Selection"	1. Press UP or DOWN to scroll to the desired syringe. 2. Press ENTER to select the syringe and return the pump to "Confirm Syringe." **Note:** If no syringe is loaded, "Load Syringe" will display.
"Prime Pump (0.5 mL Increments)"	• Press YES if you want to prime the set. • Press NO if you do not want to prime the set. This will advance the pump to "Mode Selection."
WARNING	**Make sure the pump is disconnected from the patient infusion site while priming!**
"Lock Cover to Prime"	Before priming, close and lock the syringe compartment door.
"Prime Pump (0.5 mL Increments)"	• Press the START button to prime the set (0.5 mL per press). • Press the STOP button to stop priming the set.
"Prime Pump (0.5 mL Increments)"	• Press YES if priming is complete. • Press NO if you wish to prime an additional 0.5 mL. **Note:** The maximum prime volume per syringe is 5 mL.
"Mode Selection"	• Press PCA ONLY to program a PCA only infusion.
"Drug Units Selection"	**Note:** This screen will not appear if the pump is configured for only one unit. • Press mL (milliliters), mg (milligrams), or MCG (micrograms) to select the desired units.
"Confirm Drug Units"	• Press YES if the unit selected is correct and go to "Set Concentration." • Press NO if the unit selected is incorrect. This will return the pump to "Drug Units Selection."

The Display Screen Says:	PCA Only Infusion Programming Description
"Set Concentration"	**Note:** This screen appears if either mg or MCG was selected. **Note:** The concentration range is noted at the top of the screen. 1. Use the numeric keypad to enter numbers and the decimal. 2. Press ENTER to go to "Confirm Concentration."
"Confirm Concentration"	• Press YES if the concentration is correct and go to "Set PCA Dose." • Press NO if the concentration selected is incorrect. This will return the pump to "Set Concentration."
"Set PCA Dose"	**Note:** The PCA dose range is noted at the top of the screen. 1. Use the numeric keypad to enter numbers and the decimal. 2. Press ENTER to go to "Set Lockout."
"Set Lockout"	**Note:** The lockout range is noted at the top of the screen. **Note:** The lockout time begins when the PCA bolus is completed OR upon restart if the lockout time has been modified. Lockout timing is not affected by clinician boluses. 1. Use the numeric keypad to enter the minutes. 2. Press ENTER to go to "Set 1 or 4 Hour Limit."
"Set 1 or 4 Hour Limit"	**Note:** This is either one hour or four hours, depending on how the pump was configured in advanced setup. 1. Use the numeric keypad to enter numbers and the decimal. 2. Press ENTER to go to "Verify Prescription."
"Verify Prescription"	Review the programmed PCA only infusion. If a change must be made: • Press UP or DOWN to scroll to the desired parameter. • Press ENTER to select the parameter and return to its programming screen. • Press OKAY to go to "Confirm Prescription." • Press CLEAR RX to return the pump to "Mode Selection."

The Display Screen Says:	PCA Only Infusion Programming Description
"Confirm Prescription"	Verify the programmed PCA only infusion information (this is the second clinician verification). • Press OKAY to go to "Loading Dose." • Press STANDBY to retain the programmed infusion in the pump's memory for future use. • Press EDIT RX to return the pump to "Verify Prescription" to change the prescription.
"Loading Dose"	• Press YES to go to "Set Loading Dose." • Press NO to go to "Start Infusion."
"Set Loading Dose"	Note: The loading dose range is noted at the top of the screen. 1. Use the numeric keypad to enter numbers and the decimal. 2. Press ENTER to go to "Confirm Loading Dose."
"Confirm Loading Dose"	Review the loading dose information that you have entered. • Press OKAY to go to "Start Infusion."
"Start Infusion"	Press the START button to begin the loading dose infusion.
"Loading Dose Infusing"	Press the STOP button to stop the loading dose infusion and go to "Loading Dose Interrupted."
"Loading Dose Interrupted"	• Press the START button to restart the loading dose infusion. • Press OKAY to cancel the loading dose and go to "Start Infusion." Note: If the pump is on manual start, press the START button to begin the infusion.
"Loading Dose Complete"	Press OKAY to go to "Start Infusion."
"Start Infusion"	• Press the START button to begin the infusion. • Press EDIT RX to go to the "Enter the Code" screen to change the prescription.
"PCA"	The PCA infusion is in progress. • Press the STOP button to stop the infusion.

The Display Screen Says:	PCA Only Infusion Programming Description
"Infusion Stopped"	• Press the START button to restart the infusion. • Press EDIT RX to go to the "Enter the Code" screen to change the prescription. • Press CLINICIAN BOLUS to go to the "Enter the Code" screen to program the clinician bolus.
"Enter the Code"	1. Use the numeric keypad to enter the clinician password. 2. Press ENTER.
"Edit Prescription"	**Note:** Units and concentration cannot be edited. Review the programmed information. 1. Press UP or DOWN to scroll to the desired parameter. 2. Press ENTER to select the parameter. 3. Use the numeric keypad to enter numbers and the decimal. **Note: You will need to reenter the hourly limit.** 4. Press OKAY to go to "Confirm Prescription."
"Confirm Prescription"	Review the programmed information. • Press OKAY to go to "Infusion Stopped." • Press STANDBY to retain the programmed infusion in the pump's memory for future use. • Press EDIT RX to change the prescription.
"Set Clinician Bolus"	1. Use the numeric keypad to enter numbers and the decimal. 2. Press ENTER to go to "Confirm Bolus."
"Confirm Bolus"	Press OKAY to confirm the clinician bolus.
"Start Infusion"	Press the START button to begin the clinician bolus.
"Infusing"	• Press the STOP button to stop the clinician bolus infusion and go to "Bolus Interrupted."
"Bolus Interrupted"	• Press the START button to restart the clinician bolus infusion. • Press OKAY to cancel the clinician bolus infusion and proceed to the main infusion. **Note:** If the pump is on manual start, press the START button to begin the infusion.

The Display Screen Says:	PCA Only Infusion Programming Description
"Bolus Complete"	Press OKAY to return to "Infusion Stopped."

Continuous Only Infusions

Continuous Only Programmable Ranges

Loading dose rate	150 mL/hr
Clinician bolus rate	150 mL/hr
Rate setting range	0.1 mL to 99.9 mL in 0.1 mL increments
Loading dose volume range	0.1 mL to 9.9 mL in 0.1 mL increments
Clinician bolus dose volume range	0.1 mL to 9.9 mL in 0.1 mL increments
Priming rate	150 mL/hr
Priming volume	0.5 mL per START button press
Concentration ranges	• 0.1 mg/mL to 99.9 mg/mL in 0.1 mg/mL increments • 1 MCG/mL to 999 MCG/mL in 1 MCG/mL increments

Programming a Continuous Only Infusion

Note: When available, press BACK during programming to return to the previous screen.

Note: When the syringe is removed and a new syringe is installed, the pump will go to either the "Confirm Syringe" or "Syringe Selection" screen.

Note: Any calculated values are rounded to the nearest least significant digit of precision. For example, if the precision is 0.1, a calculated value of 25.75 rounds to 25.8. A calculated value of 25.74 rounds to 25.7.

Note: When an infusion is initiated there can be a delay, especially at low flow rates, before the pressure on the syringe plunger takes up the slack in the system and applies enough pressure to overcome the initial resistance of the plunger in the syringe itself. Software in the pump has been designed to minimize this delay before solution delivery actually begins.

Note: The pump's post occlusion bolus reduction feature is designed to reduce the amount of medication that could be inadvertently administered to the patient after the removal of an occlusion during infusion. The pump's motor runs backwards slightly after an occlusion is detected to relieve the pressure that builds up in the system. This enables the pump to relieve accumulated pressure caused by an occlusion that would result in a larger-than-intended bolus of medication to be delivered upon removal of the occlusion.

Note: The default clinician password for security codes is "123." However, this password can be customized. Refer to *User Identifiers* in "Preferences" for more information.

Note: The following is a list of all possible programming screens, not necessarily the order of the screens as shown when programming the pump.

The Display Screen Says:	Continuous Only Infusion Programming Description
WARNING	**To help prevent medication errors, Baxter recommends that both the clinician programming the pump and another clinician check the accuracy of prescription and programming information before the infusion is started.**
"Power Up Complete"	Review the date and time information. • Press YES if the date/time information is correct. • Press NO if the date/time information is incorrect. This will advance the pump to the numeric keypad, where the correct date/time information can be entered.
"Lock Cover/ Unlock Cover"	Follow the screen prompts, which will prompt you to either unlock/lock or lock/unlock the syringe compartment door. **Note:** This step verifies that the operator is authorized to use the pump.
"Resume Therapy"	If the pump was turned off during an infusion: • Press YES to resume the programmed infusion. This will take the pump to "Confirm Syringe." **Note:** You have up to **one hour** after the pump is turned off to resume the infusion. • Press NO to cancel the infusion. This will return the pump to "Patient History."
"Patient History"	• Press YES to clear the patient history. **Note: Once YES is pressed, all patient history is deleted. If you wish to upload the patient history to either a printer or PDA, press the HISTORY button.** • Press NO if you do not want to clear the history. This will take the pump to "Resume Therapy."
"Load Syringe"	Load the syringe.

The Display Screen Says:	Continuous Only Infusion Programming Description
"Confirm Syringe"	• Press YES if the syringe indicated on the screen is the same as the syringe that is loaded. This will take the pump to "Prime Pump (0.5 mL Increments)." • Press NO if the syringe indicated on the screen is not the same as the syringe that is loaded. This will take the pump to "Syringe Selection."
"Syringe Selection"	1. Press UP or DOWN to scroll to the desired syringe. 2. Press ENTER to select the syringe and return the pump to "Confirm Syringe." Note: If no syringe is loaded, "Load Syringe" will display.
"Prime Pump (0.5 mL Increments)"	• Press YES if you want to prime the set. • Press NO if you do not want to prime the set. This will advance the pump to "Mode Selection."
WARNING!	**Make sure the pump is disconnected from the patient infusion site while priming!**
"Lock Cover to Prime"	Before priming, close and lock the syringe compartment door.
"Prime Pump (0.5 mL Increments)"	• Press the START button to prime the set (0.5 mL per press). • Press the STOP button to stop priming the set.
"Prime Pump (0.5 mL Increments)"	• Press YES if priming is complete. • Press NO if you wish to prime an additional 0.5 mL. Note: The maximum prime volume per syringe is 5 mL.
"Mode Selection"	• Press CONTINUOUS ONLY to program a continuous only infusion.
"Drug Units Selection"	Note: This screen will not appear if the pump is configured for only one unit. • Press mL (milliliters), mg (milligrams), or MCG (micrograms) to select the desired units.
"Confirm Drug Units"	• Press YES if the unit selected is correct and go to "Set Concentration." • Press NO if the unit selected is incorrect. This will return the pump to "Drug Units Selection."

The Display Screen Says:	Continuous Only Infusion Programming Description
"Set Concentration"	**Note:** This screen appears if either mg or MCG was selected. **Note:** The concentration range is noted at the top of the screen. • Use the numeric keypad to enter numbers and the decimal. • Press ENTER to go to "Confirm Concentration."
"Confirm Concentration"	• Press YES if the concentration is correct and go to "Set Continuous Rate." • Press NO if the concentration selected is incorrect. This will return the pump to "Set Concentration."
"Set Continuous Rate"	**Note:** The continuous rate range is noted at the top of the screen. 1. Use the numeric keypad to enter numbers and the decimal. 2. Press ENTER to go to "Verify Prescription."
"Verify Prescription"	Review the programmed continuous only infusion. If a change must be made: • Press UP or DOWN to scroll to the desired parameter. • Press ENTER to select the parameter and return to its programming screen. • Press OKAY to go to "Confirm Prescription." • Press CLEAR RX to return the pump to "Mode Selection."
"Confirm Prescription"	Verify the programmed continuous only infusion information (this is the second clinician verification). • Press OKAY to go to "Loading Dose." • Press STANDBY to retain the programmed infusion in the pump's memory for future use. • Press EDIT RX to change the prescription.
"Loading Dose"	• Press YES to go to "Set Loading Dose." • Press NO to go to "Start Infusion."
"Set Loading Dose"	**Note:** The loading dose range is noted at the top of the screen. 1. Use the numeric keypad to enter numbers and the decimal. 2. Press ENTER to go to "Confirm Loading Dose."

The Display Screen Says:	Continuous Only Infusion Programming Description
"Confirm Loading Dose"	Review the loading dose information that you have entered. • Press OKAY to go to "Start Infusion."
"Start Infusion"	Press the START button to begin the loading dose infusion.
"Loading Dose Infusing"	Press the STOP button to stop the loading dose infusion and go to "Loading Dose Interrupted."
"Loading Dose Interrupted"	• Press the START button to restart the loading dose infusion. • Press OKAY to cancel the loading dose and go to "Start Infusion." **Note:** If the pump is on manual start, press the START button to begin the infusion.
"Loading Dose Complete"	Press OKAY to go to "Start Infusion."
"Start Infusion"	• Press the START button to begin the infusion. • Press EDIT RX to go to the "Enter the Code" screen to change the prescription.
"Continuous Only"	The continuous only infusion is in progress.
"Infusion Stopped"	• Press the START button to restart the infusion. • Press EDIT RX to go to the "Enter the Code" screen to change the prescription. • Press CLINICIAN BOLUS to go to the "Enter the Code" screen to program the clinician bolus.
"Enter the Code"	1. Use the numeric keypad to enter the clinician passcode. 2. Press ENTER.
"Edit Prescription"	Review the programmed information. • Press UP or DOWN to scroll to the desired parameter. • Press ENTER to select the parameter. • Use the numeric keypad to enter numbers and the decimal. • Press OKAY to go to "Confirm Prescription."

The Display Screen Says:	Continuous Only Infusion Programming Description
"Confirm Prescription"	Review the programmed information. • Press OKAY to go to "Infusion Stopped." • Press STANDBY to retain the programmed infusion in the pump's memory for future use. • Press EDIT RX to change the prescription.
"Set Clinician Bolus"	1. Use the numeric keypad to enter numbers and the decimal. 2. Press ENTER to go to "Confirm Bolus."
"Confirm Bolus"	Press OKAY to confirm the clinician bolus.
"Start Infusion"	Press the START button to begin the clinician bolus.
"Infusing"	• Press the STOP button to stop the clinician bolus infusion and go to "Bolus Interrupted."
"Bolus Interrupted"	• Press the START button to restart the clinician bolus infusion. • Press OKAY to cancel the clinician bolus infusion and proceed to the main infusion. **Note:** If the pump is on manual start, press the START button to begin the infusion.
"Bolus Complete"	Press OKAY to go to "Infusion Stopped."

Patient History

Transferring Patient History to a Handheld Personal Digital Assistant (PDA) or Printer

In addition to viewing patient history on the display screen, it can be transferred to an optional PDA or IR printer (see *Technical Specifications* for specific models) without any cables.

To use the PDA or printer: From 3" to 24" away, align the IR port of the device with the IR port of the pump (refer to Figure 11) for approximately three seconds. The transfer takes place *after* the screen turns off and the devices recognize each other. Then, the screen automatically turns back on.

Note: The devices MUST remain aligned until the transfer of information is complete.

Use this procedure whenever the display screen instructs you to begin printing/uploading.

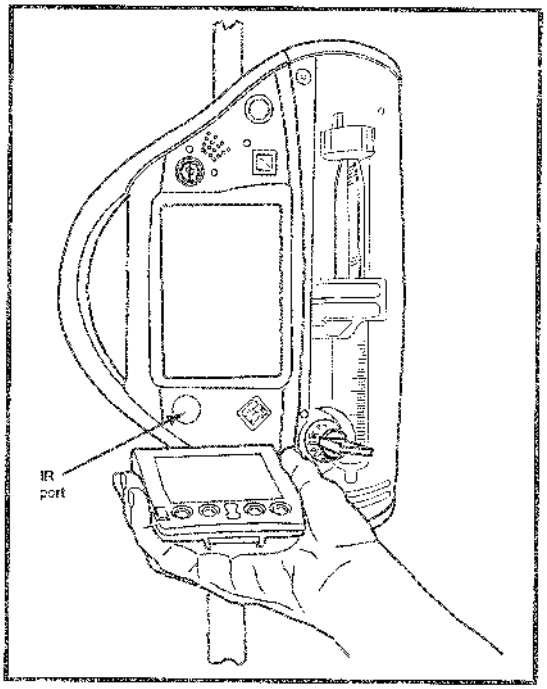

Figure 11

Note: The default clinician password for security codes is "123." However, this password can be customized. Refer to *User Identifier* in "Preferences" for more information.

Note: The volume reported by the pump may differ from the volume infused into the patient for a variety of reasons, among them: syringe overfill, prime, air purge, and post occlusion bolus reduction volumes. This variation in volume may be minimal.

Note: Logged history events are retrievable within 30 seconds of the event. You must exit and return to see events that have just occurred.

Note: The pump will retain the device and event logs, as well as the service and medication history, when the pump is turned off or when the batteries are removed.

Press the HISTORY button to access the patient history menu.

- Use the UP or DOWN key to scroll to the desired selection.
- Press ENTER to select the parameter.
- Press OPTIONS to access the screen that allows you to transfer the information to a PDA or printer. Refer to "Specifications" in the *Technical Specifications* manual for additional technical requirements.
- If available, press BACK to return to the preceding screen.

Note: Reports sent to a PDA or printer will include the pump serial number, and the date and time the report was requested.

Viewing or printing the complete patient history	To view or print the complete patient history (the initial and current prescriptions, plus all of the information found in the chart history and hourly history screens), do the following: **Note:** If the report is sent to the printer, it will also include the information found in the event log. 1. Press the OPTIONS key to transfer the history to the PDA or printer. 2. Press UPLOAD to transfer the information to a PDA or PRINT to transfer the information to the printer. 3. Use the numeric keypad to enter the clinician security code. 4. Use the alpha-numeric keypad to enter the patient ID. 5. Align IR ports as described in "Transferring Patient History to a Handheld Personal Digital Assistant (PDA) or Printer." 6. Press the OKAY key to send the history to the chosen device. 7. Press CANCEL to return to "Options."

Chart History	Displays the number of PCA injections, number of PCA attempts, amount of medication delivered, and the last time chart history was cleared. • Press the CLEAR key to clear the chart history. • Press the OPTIONS key to transfer the chart history to the PDA or printer. 1. Press UPLOAD to transfer the information to a PDA or PRINT to transfer the information to the printer. 2. Use the numeric keypad to enter the clinician security code. 3. Use the alpha-numeric keypad to enter the patient ID. 4. Align IR ports as described in "Transferring Patient History to a Handheld Personal Digital Assistant (PDA) or Printer." 5. Press the OKAY key to send the chart history to the chosen device. 6. Press CANCEL to return to "Options."
Hourly History	Displays infusion amount delivered, number of PCA injections, and number of PCA attempts for the past 24 hours and the current partial hour. Information displayed is in reverse chronological order (the most recent events first). • Press PAGE UP or PAGE DOWN to scroll through the hourly history. • Press the OPTIONS key to transfer the hourly history to the PDA or printer. 1. Press UPLOAD to transfer the information to a PDA or PRINT to transfer the information to the printer. 2. Use the numeric keypad to enter the clinician security code. 3. Use the alpha-numeric keypad to enter the patient ID. 4. Align IR ports as described in "Transferring Patient History to a Handheld Personal Digital Assistant (PDA) or Printer." 5. Press the OKAY key to send the hourly history to the chosen device. 6. Press CANCEL to return to "Options."

Event History	Displays alerts, alarms, infusion start/stop, syringe compartment door lock/unlock, loading dose start, clinician bolus start, PCA dose start, and prescription changes since the last time medication history was cleared. Information displayed is in reverse chronological order (the most recent events first) and will include a date and time stamp. • Press PAGE UP and PAGE DOWN to scroll through the event log. • Press the OPTIONS key to transfer the event log to the printer. **Note:** The event log cannot be uploaded to a PDA. 1. Press PRINT to transfer the information to the printer. 2. Use the numeric keypad to enter the clinician security code. 3. Use the alpha-numeric keypad to enter the patient ID. 4. Align IR ports as described in "Transferring Patient History to a Handheld Personal Digital Assistant (PDA) or Printer." 5. Press the OKAY key to send the event log to the printer. 6. Press CANCEL to return to "Options."

Preferences

Adjusting the Brightness, Contrast, Tone Volume, and Clinician Password

Press the PREFERENCES button to access the pump's options menu.

Note: The default clinician password for security codes is "123." However, this password can be customized. Refer to *User Identifier* in this chapter for more information.

- Use the UP or DOWN key to scroll to the desired selection.
- Press ENTER to select the parameter.
- If available, press BACK to return to the preceding screen.

Volume	The bar graph indicates the relative volume. • Press PLUS to increase the volume. • Press MINUS to decrease the volume. • Press ENTER to save the change and return to the main menu.
Brightness	The bar graph indicates the relative brightness of the screen. • Press PLUS to increase the brightness. • Press MINUS to decrease the brightness. • Press ENTER to save the change and return to the main menu.
Contrast	The bar graph indicates the relative contrast of the screen. • Press PLUS to increase the contrast. • Press MINUS to decrease the contrast. • Press ENTER to save the change and return to the main menu.
Pump Identifiers	Offers information about the pump, such as the serial number, language, and software/hardware version.

User Identifier	**Note:** To change or review the clinician password, insert the syringe compartment key in the lock and unlock the syringe compartment door. **Note:** The current clinician password is found at the top of the screen. 1. Use the numeric keypad to enter the new password. 2. Press ENTER.

Alerts and Alarms

Alerts and alarms are listed alphabetically.

Alerts

When an alert occurs:

- An infusion, if initiated, continues.
- An alert tone sounds and the yellow light flashes.
- The display screen tells you the nature of the alert and what you must do.
- Pressing the MUTE button silences the audible alert for approximately 15 minutes.
- Pressing the OKAY key silences the audible alert for approximately 15 minutes and displays a yellow bell at the top of the screen.
- Pressing the yellow bell displays the alert message and restarts the alert tone.
- Clearing the alert condition silences the alert tone and stops the yellow light from flashing.

Note: When an alert occurs while in "Preferences" or "Patient History," press BACK to exit the current screen and view the alert text.

Alert	Situation	Action
"Batteries Low"	Approximately 60, 45, 30, or 15 minutes of battery life remain (see screen for time).	Turn off the pump and replace all four D-cell alkaline batteries.
"(Button Name) Button Held"	The button has been continuously pressed for more than three minutes.	• Release the button. • If the button remains stuck, contact authorized service personnel for assistance.

Alert	Situation	Action
"Call Back Alert"	This alert occurs after approximately two minutes of inactivity if the pump is NOT infusing, and NOT in standby.	To proceed, enter the clinician security code.
"Cover Open Alert"	The pump is locked and the syringe is confirmed, but the syringe compartment door has been left unlocked for more than 60 seconds.	Close and lock the syringe compartment door.
"Dosage Limit Alert"	The pre-determined PCA dose limit (either one-hour or four-hour) has been reached.	• Modify the prescription. • The pump will automatically clear the alert and restart the infusion when, due to the passage of time, the total basal and PCA amount given falls below the one-hour or four-hour limit.
"PCA Button Disconnected"	The PCA button has been disconnected from the pump.	Connect the PCA button to the pump.
"PCA Button Held"	The PCA button has been continuously pressed for more than three minutes.	• Release the PCA button. Note: Advise the patient to briefly press and release the PCA button when making a PCA dose request. • If the button remains stuck, contact your authorized Deltec service center for a replacement PCA button.
"Screen Held"	Something has been touching the display screen for more than three minutes.	Remove the contact from the display screen.

Alert	Situation	Action
"Syringe Volume Low"	The volume remaining is less than 5 mL.	Prepare to change the syringe, if prescribed.
"Unauthorized Access Attempt"	An incorrect password has been entered three times.	Unlock, then lock the syringe compartment cover.

Alarms

When an alarm occurs:

- The pump stops infusing.
- An alarm tone sounds and the red light flashes.
- The display screen tells you the nature of the alarm and what you must do.
- Pressing the MUTE button silences the audible alarm for two minutes. After two minutes, the alarm tone resumes.
- Clearing the alarm condition silences the alarm tone and stops the red light from flashing.

Note: When an alarm occurs while in "Preferences" or "Patient History," press BACK to exit the current screen and view the alarm text.

Note: Alarms are disabled under the following conditions:
a) There is no occlusion alarm if the pump is not running.
b) There is no "Cover Unlocked" if the pump is not infusing or priming.

Alarm	Situation	Action
"Batteries Depleted"	Only three minutes of battery power remain to power the pump. **Note:** The user will not be able to mute the "Batteries Depleted" alarm.	Turn off the pump and replace all four D-cell alkaline batteries.
"(Button Name) Button Stuck"	The button has been continuously pressed for more than six minutes.	• Release the button. • Press OK to resume normal operation. • If the button remains stuck, return the pump to an authorized Baxter service center for repair.

Alarm	Situation	Action
"Cover Unlocked"	The syringe compartment door is unlocked while the pump is infusing.	Close and lock the syringe compartment door.
"Downstream Occlusion"	The pump has detected an occlusion or blockage that is preventing fluid flow.	• Check the tubing set for closed clamps or kinks. • Check for an empty syringe. • Assess patency of the vascular device.
"Sensor Not Calibrated"	The sensor calibration is either invalid or corrupted.	Contact authorized service personnel immediately for assistance.
"Syringe Empty"	The syringe is empty.	Replace the syringe, if prescribed.
"Syringe Misloaded"	The syringe is misloaded, or it has moved out of place while priming or infusing.	Properly load the syringe, following the procedure in "Setting Up the Pump."
"Touchscreen Not Calibrated"	The display screen calibration is invalid or corrupted.	Contact authorized service personnel immediately for assistance.
"Touchscreen Held"	Something has been touching the display screen for more than six minutes.	• Remove the contact from the display screen. • If the display screen remains stuck, contact your authorized Baxter service center for repair.

Service Codes

If a service code occurs, turn off the pump to silence the alarm, then turn on the pump and reprogram the infusion. If the service code occurs again, turn off the pump and contact authorized service personnel.

For additional information about service codes, refer to the *Syndeo Maintenance Manual*.

Glossary

Alarm

An event marked by a flashing alarm light (red), an alarm tone, and a specific display screen message that signals a condition requiring a response by the operator, that stops the infusion.

Alarm light

A red light located on the front panel. The alarm light flashes whenever the pump is in an alarm state. It is on when the pump is in a service code condition, and during POSTs and certain POST failures.

Alert

An event marked by a flashing alert light (yellow), an alert tone, and a specific display screen message that provides important status information or signals a condition requiring a response by the user. An infusion continues if underway.

Alert light

A yellow light located on the front panel. The alert light flashes whenever the pump is in an alert or notification state. It is on during POSTs, certain POST failures, and when the pump is not infusing or in the service mode.

Attempt

The patient's press of the PCA button, which is intended to initiate a PCA dose.

Basal + PCA infusion mode

A pump operating mode where the motor runs at a continuous rate and additional drug delivery may be initiated by the patient during the active therapy.

Basal rate

The programmed continuous infusion rate when the pump is operating in basal + PCA mode.

Button

A physical button that is permanently located on the device. Each button performs a dedicated function and is labeled accordingly.

cm

Centimeter

Chart history

Displays the number of PCA injections, number of PCA attempts, and amount of medication delivered since the last time chart history was cleared, as well as the actual time the chart history was cleared.

Clinician bolus

The programmed quantity of drug initiated by the clinician during the course of therapy.

Clinician password

A code that must be entered by the user to gain access to the clinician controlled functions.

Concentration

Programmed amount of drug in milligrams or micrograms per milliliter of fluid.

Continuous Only infusion mode

A pump operating mode where the motor runs at a continuous rate.

Continuous rate

Programmed continuous infusion rate when the pump is operating in continuous only mode.

Display screen

The information screen on the front of the pump.

Event log

Lists the alerts, alarms, infusion start/stop, syringe compartment lock/unlock, loading dose start, clinician bolus start, PCA dose start, and prescription changes since the last time the medication history was cleared. Information displayed is in reverse chronological order (the most recent events first).

Four-hour limit

The programmed maximum volume of drug that may be delivered during a four-hour period.

Hourly history

Displays the infusion amount delivered, number of PCA injections, and number of PCA attempts in hourly segments.

Incompatible syringe

Any syringe other than those listed in "Setting Up the Pump," *Installing the Syringe*.

Note: NOTE: Multiple labels applied to the syringe barrel could affect the measured diameter of approved syringes.

Infusion mode

One of the three types of operating modes supported by the pump: Basal + PCA, Continuous Only, or PCA Only.

Light

Colored light indicators on the pump's front panel.

Loading dose

Optional initial dose delivered at the start of therapy.

MCG

Microgram

mg

Milligram

mL

Milliliter

Notification

A notification informs the operator of a condition that requires a response before further operator navigation is allowed. A notification includes an audible signal.

One-hour limit

The programmed maximum volume of drug that may be delivered during a one-hour period.

Patient history

A collection of data that lists the most recent or current therapy, consisting of the prescription data, alarm status, and infusion totals.

PCA

Patient Controlled Analgesia

PCA button

An external PCA button that connects to the pump via a cord and allows the patient to initiate PCA doses.

PCA dose

The programmed volume of drug to be injected when requested by the patient.

PCA Only infusion mode

A pump operating mode where the motor runs only when a drug delivery has been initiated by the patient during the active therapy.

PCA request

PCA action (PCA button press) intended to initiate a PCA dose. The PCA dose request is recorded in the patient history as an attempt. If a PCA dose is delivered (partial or complete) as a result of a request, it is also recorded in the patient history as an injection.

POST

After the pump is turned on it goes through a series of Power On Self Tests (POSTs) to verify the proper operation of the pump.

Service code

An event marked by a problem with the pump that may prevent correct software operation, where the user is not allowed to navigate from the service code screen.

"Sleep"

The pump disables the display screen backlight to save power after one minute of inactivity, rendering the display screen unreadable. A touch of the display screen or any button "wakes up" the screen.

Standby

A state initiated by the user where the pump retains the programmed infusion information in memory for future use. In this state, user input is restricted and the therapy cannot be started until security is passed and the current prescription is confirmed.

Therapy

A course of treatment using a programmed prescription and initiated by a confirmed prescription. During the therapy, a patient may receive one or more bolus doses, one or more PCA doses, and/or a continuous infusion.

Index

"Basal + PCA", 35
"Bolus Complete", 36, 44, 51
"Bolus Interrupted", 36, 43, 51
"Confirm Bolus", 35, 43, 51
"Confirm Concentration", 33, 41, 49
"Confirm Drug Units", 32, 40, 48
"Confirm Loading Dose", 34, 42, 50
"Confirm Prescription", 34, 35, 42, 43, 49, 51
"Confirm Syringe", 32, 40, 48
"Continuous Only", 50
"Drug Units Selection", 32, 40, 48
"Edit Prescription", 35, 43, 50
"Enter the Code", 35, 43, 50
"Infusing", 35, 43, 51
"Infusion Stopped", 35, 43, 50
"Load Syringe", 31, 39, 47
"Loading Dose Complete", 34, 42, 50
"Loading Dose Infusing", 34, 42, 50
"Loading Dose Interrupted", 34, 42, 50
"Loading Dose", 34, 42, 49
"Lock Cover to Prime", 32, 40, 48
"Lock Cover/Unlock Cover", 31, 39, 47
"Mode Selection", 32, 40, 48
"Patient History", 31, 39, 47
"PCA", 42
"Power Up Complete", 31, 39, 47
"Prime Pump (0.5 mL Increments)", 32, 40, 48
"Resume Therapy", 31, 39, 47
"Set 1 or 4 Hour Limit", 33, 41
"Set Basal Rate", 33
"Set Clinician Bolus", 35, 43, 51
"Set Concentration", 33, 41, 49
"Set Continuous Rate", 49
"Set Loading Dose", 34, 42, 49
"Set Lockout", 33, 41
"Set PCA Dose", 33, 41
"Start Infusion", 34, 35, 42, 43, 50, 51
"Syringe Selection", 32, 40, 48
"Verify Prescription", 34, 41, 49

A

Alarm (definition), 65
Alarm light (definition), 65
Alarm light, 9
Alarms, list of, 61–62
Alert (definition), 65
Alert light (definition), 65
Alert light, 9
Alerts, list of, 59–61
Attempt (definition), 65
Audible feedback, 14

B

BACK key, 11
Basal + PCA
  Infusion mode (definition), 65
  Programmable ranges, 29
  Programming the infusion, 30–36
Basal rate (definition), 65
Batteries, installing, 17–18
Battery icon, 13
Brightness, adjusting, 57
Button (definition), 65
Buttons
  HISTORY, 8
  MUTE, 8
  ON/OFF, 8, 22
  PREFERENCES, 8
  START, 8
  STOP, 8

C

CANCEL key, 11
Cautions (general), list of, 5–6
Chart history (definition), 66
Chart history, 55
CLEAR key, 11
CLEAR RX key, 11
Clinician bolus (definition), 66
CLINICIAN BOLUS key, 12
Clinician password (definition), 66
cm (definition), 66
Concentration (definition), 66
Continuous Only
  Infusion mode (definition), 66

Programmable ranges, 45
Programming the infusion, 46–51
Rate (definition), 66
Contrast, adjusting, 57

D

Definitions
Alarm light, 65
Alarm, 65
Alert light, 65
Alert, 65
Attempt, 65
Basal + PCA infusion mode, 65
Basal rate, 65
Button, 65
Caution, 2
Chart history, 66
Clinician bolus, 66
Clinician password, 66
cm, 66
Concentration, 66
Continuous Only infusion mode, 66
Continuous Only rate, 66
Display screen, 66
Event log, 66
Exclamation mark in a triangle, 2
Four-hour limit, 66
Hourly history, 66
Incompatible syringe, 67
Infusion mode, 67
Light, 67
Loading dose, 67
MCG, 67
mg, 67
ml, 67
Note, 2
Notification, 67
One-hour limit, 67
Patient history, 67
PCA button, 68
PCA dose, 68
PCA Only infusion mode, 68
PCA request, 68
PCA, 67
Service code, 68
Sleep, 68
Standby, 68
Therapy, 68
Warning, 2
Display screen (definition), 66
Display screen, 10
DOWN key, 10

E

EDIT RX key, 12
ENTER key, 10
Event history, 56
Event log (definition), 56

F

Four-hour limit (definition), 66

G

Glossary, 65–68

H

HISTORY button, 8
Hourly history (definition), 66
Hourly history, 55

I

Incompatible syringe (definition), 67
Infusion light, 9
Infusion mode (definition), 67
Infusion programming
Basal + PCA, 30–36
Continuous Only, 46–51
PCA Only, 38–44

K

Keypad, 14
Keys
BACK, 11
CANCEL, 11
CLEAR RX, 11
CLEAR, 11
CLINICIAN BOLUS, 12
DOWN, 10
EDIT RX, 12
ENTER, 10
MINUS, 11
NO, 11
OKAY, 11
OPTIONS, 12
PAGE DOWN, 10
PAGE UP, 10
PLUS, 11
PRINT, 12
STANDBY, 12
UP, 10

UPLOAD, 12
WAKE, 12
YES, 11

L

Light (definition), 67
Lights
Alarm, 9
Alert, 9
Infusion, 9
Loading dose (definition), 67

M

MCG (definition), 67
mg (definition), 67
MINUS key, 11
mL (definition), 67
MUTE button, 8

N

NO key, 11
Notification (definition), 67

O

OKAY key, 11
ON/OFF button, 8, 22
One-hour limit (definition), 67
OPTIONS key, 12

P

PAGE DOWN key, 10
PAGE UP key, 10
Password, changing, 58
Patient control button (PCA), 21
Patient history (definition), 67
Patient history, 53–56
PCA
Button 21
Button (definition), 68
Definition, 67
Dose (definition), 68
Request (definition), 68
PCA Only
Infusion mode (definition), 68
Programmable ranges, 37
Programming the infusion, 38–44
PDA, transferring information to, 53–56
PLUS key, 11
Pole clamp, attaching to the pole, 19–20
POST (definition), 68
Power On Self Test (POST), 23
PREFERENCES button, 8
Preferences, 57–58
PRINT key, 12
Printer, transferring information to, 53–56
Programmable ranges
Basal + PCA, 29
Continuous Only, 45
PCA Only, 37
Pump
Back overview graphic, 15
Front overview graphic, 7
Pump identifiers, 57

S

Safety summary, 1
Service code (definition), 68
Service codes, 63
Sets
Attaching, 24
Preparing, 23
Recommended sets, 26
Sleep (definition), 68
Standby (definition), 68
STANDBY key, 12
START button, 8
STOP button, 8
Syringes
Installing, 26–28
Recommended syringes, 26

T

Therapy (definition), 68

U

UP key, 10
UPLOAD key, 12
User Identifier, 58

V

Volume, adjusting, 57

W

WAKE key, 12
Warnings (general), 2–5

Y

YES key, 11

This guide was printed on paper stock created with 10% deinked post-consumer waste paper and a total of 50% recycled fiber.

Baxter

Baxter Healthcare Corporation
Deerfield, IL 60015

Original Release
August 2003

UNCONTROLLED COPY WHEN PRINTED