REV	ECO NO.	DESCRIPTION

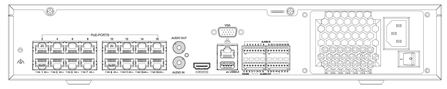

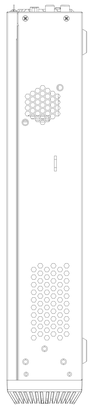

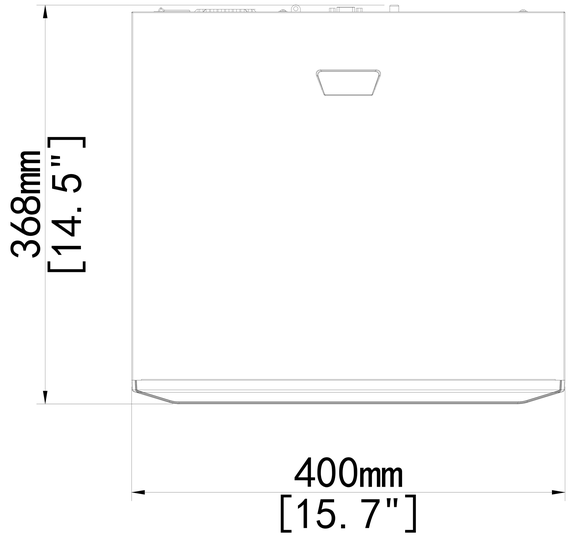

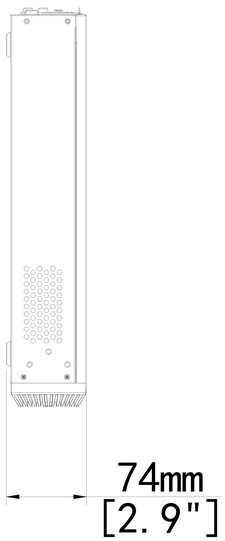

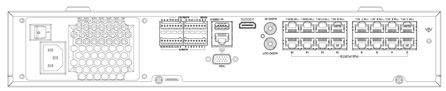

		TITLE:	
DRAW:	DATE:	UNIT'S:	DWG NO.:
CHKD:	DATE:	FINISH:	
STAD:	DATE:	MASS(Kg):	PART NO.: REV
APPD:	DATE:	SCALE: 1:4	
PRODUCT:		SHEET: 1 OF 1	MAT'L:

RELEASE LEVEL:
FILE NAME:

A2