Installation Manual

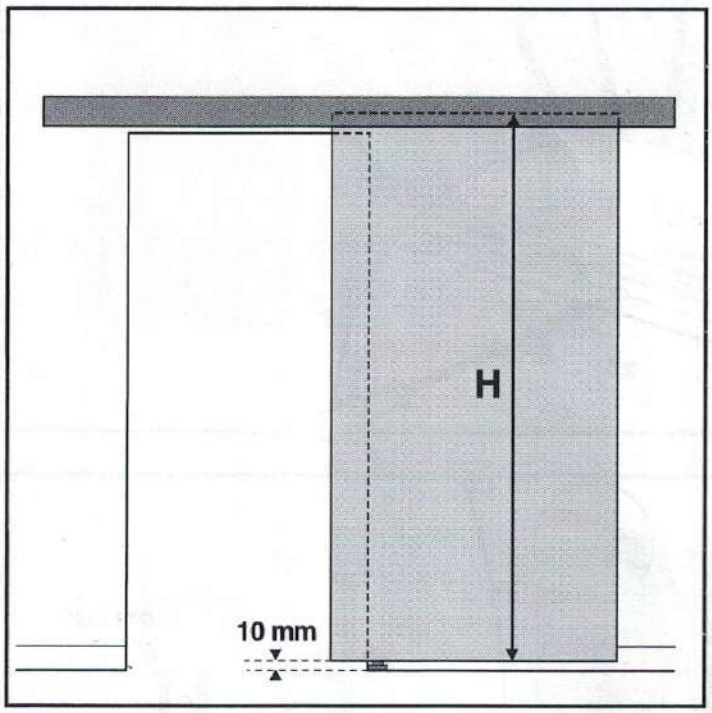

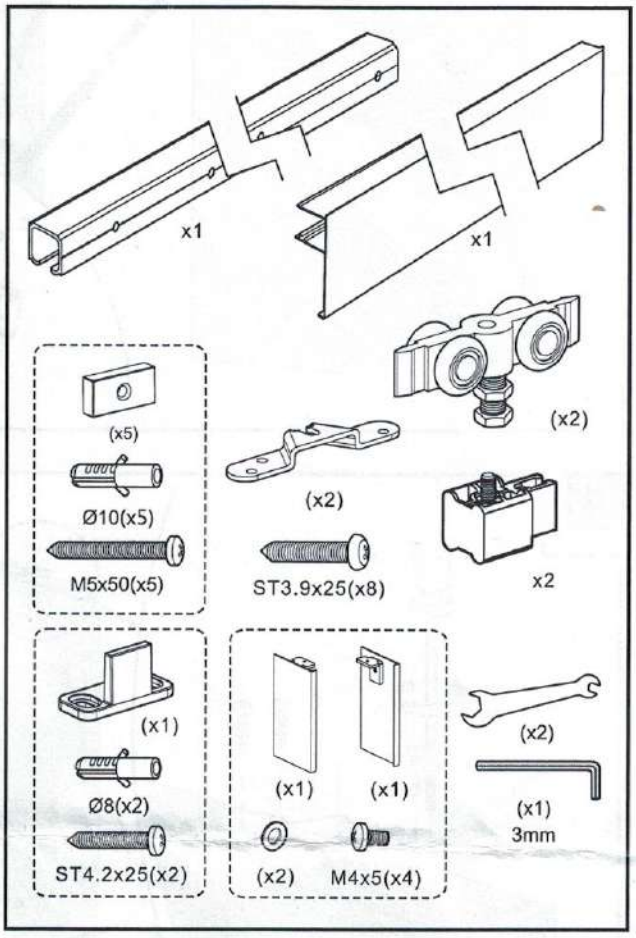

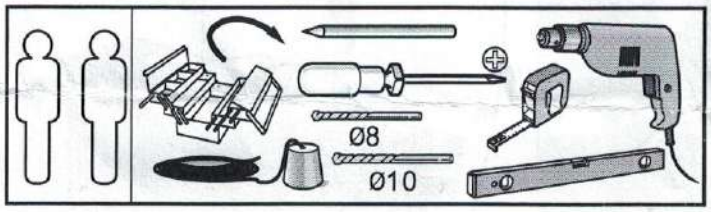

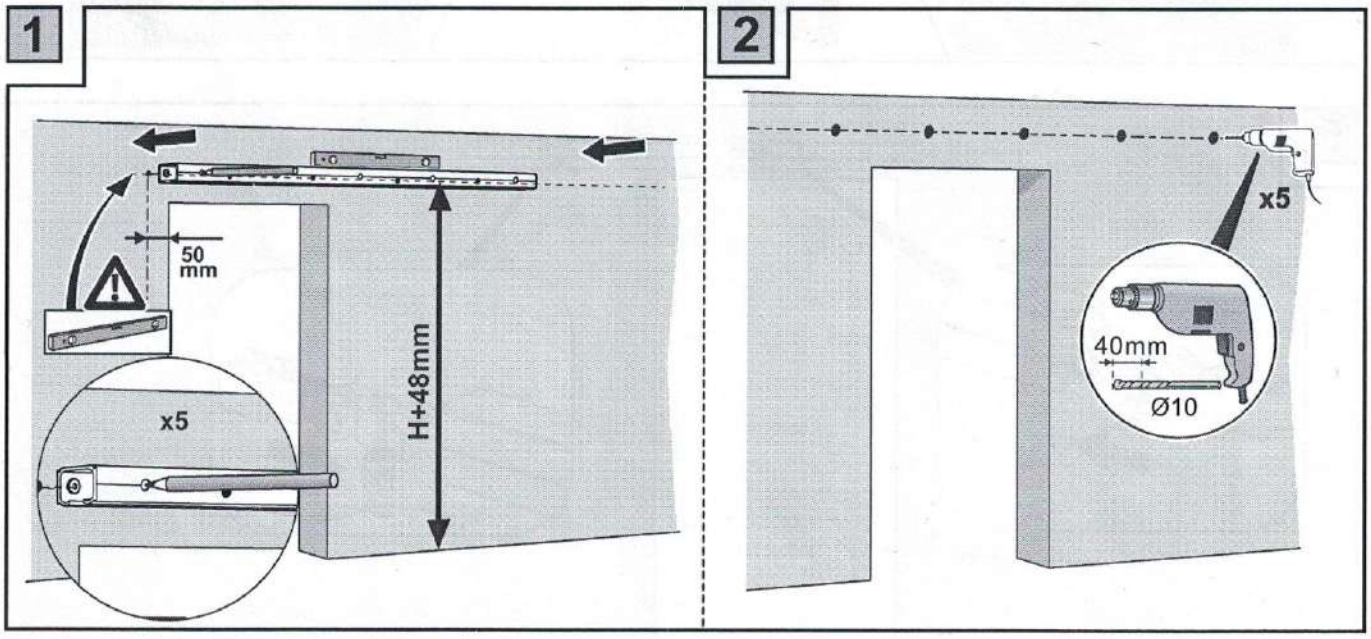

3

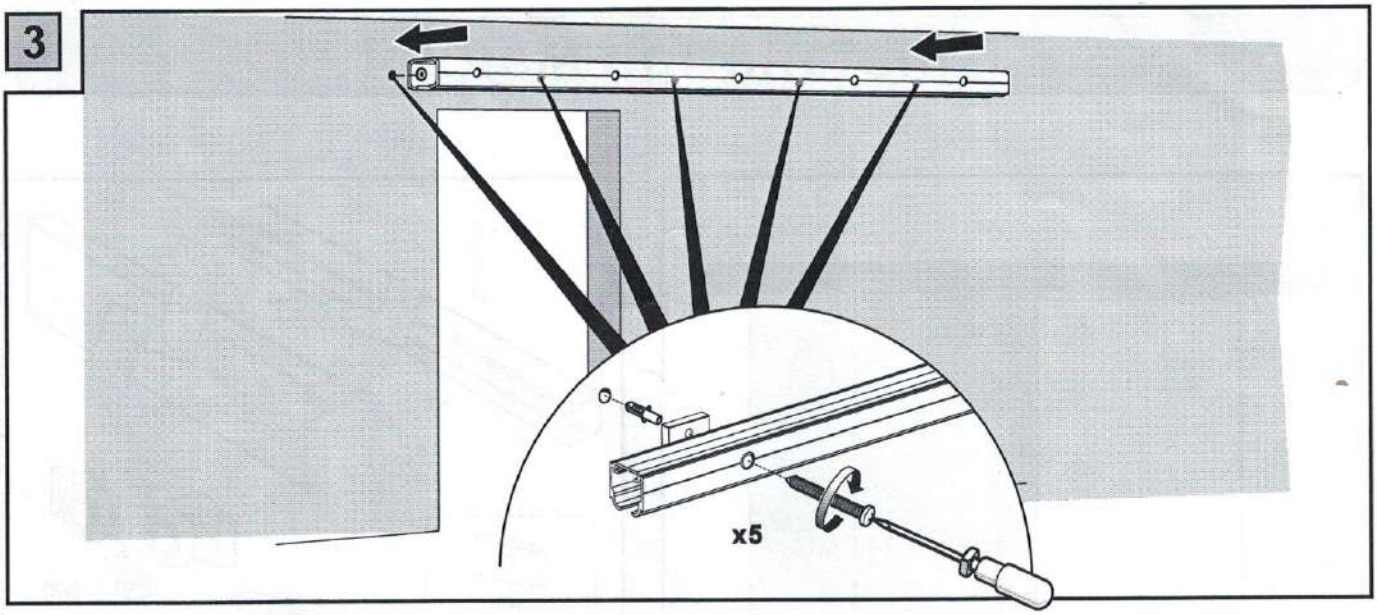

4

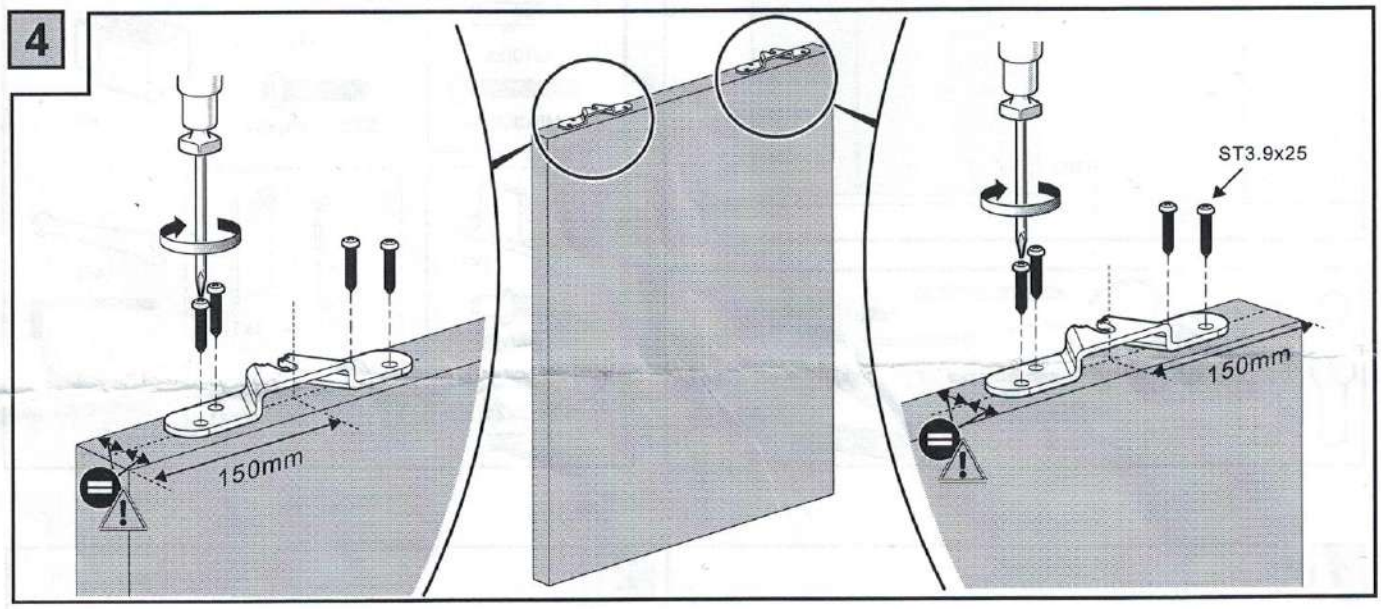

5

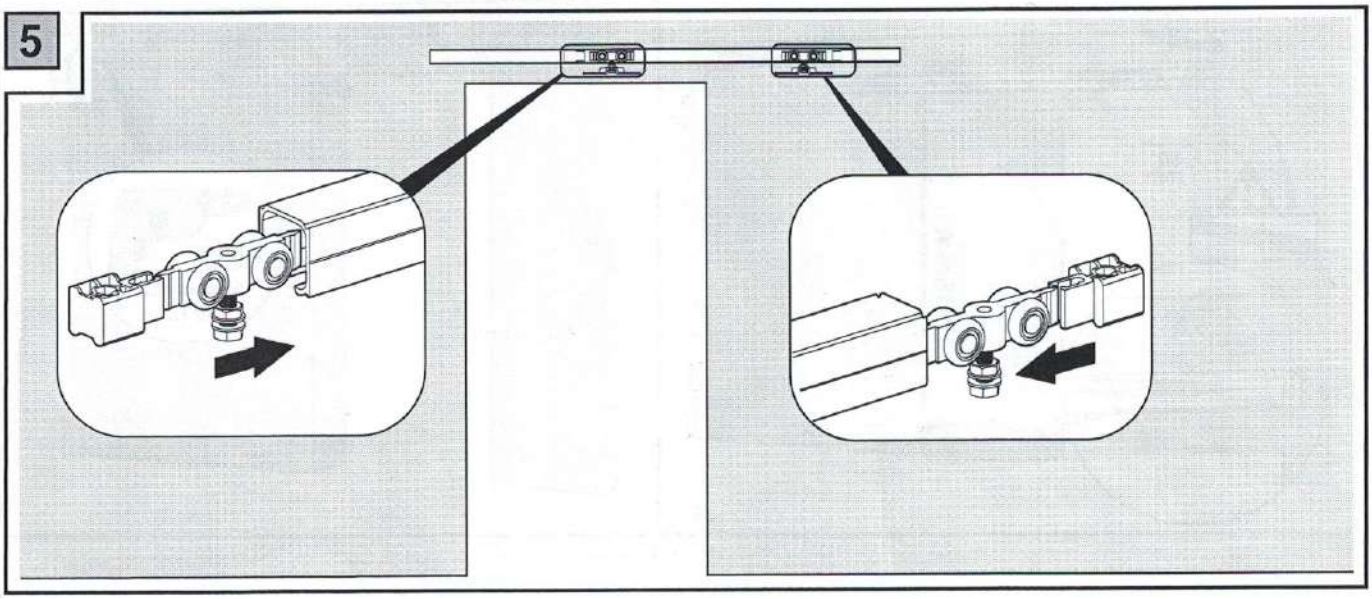

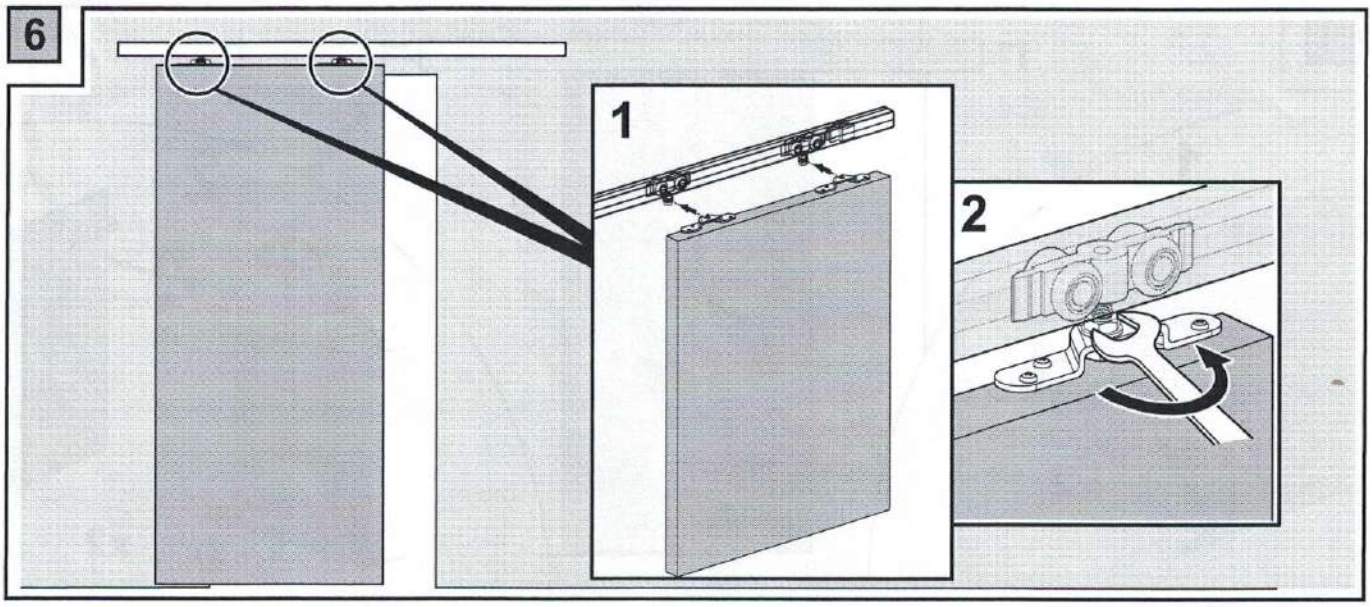
6
1
2

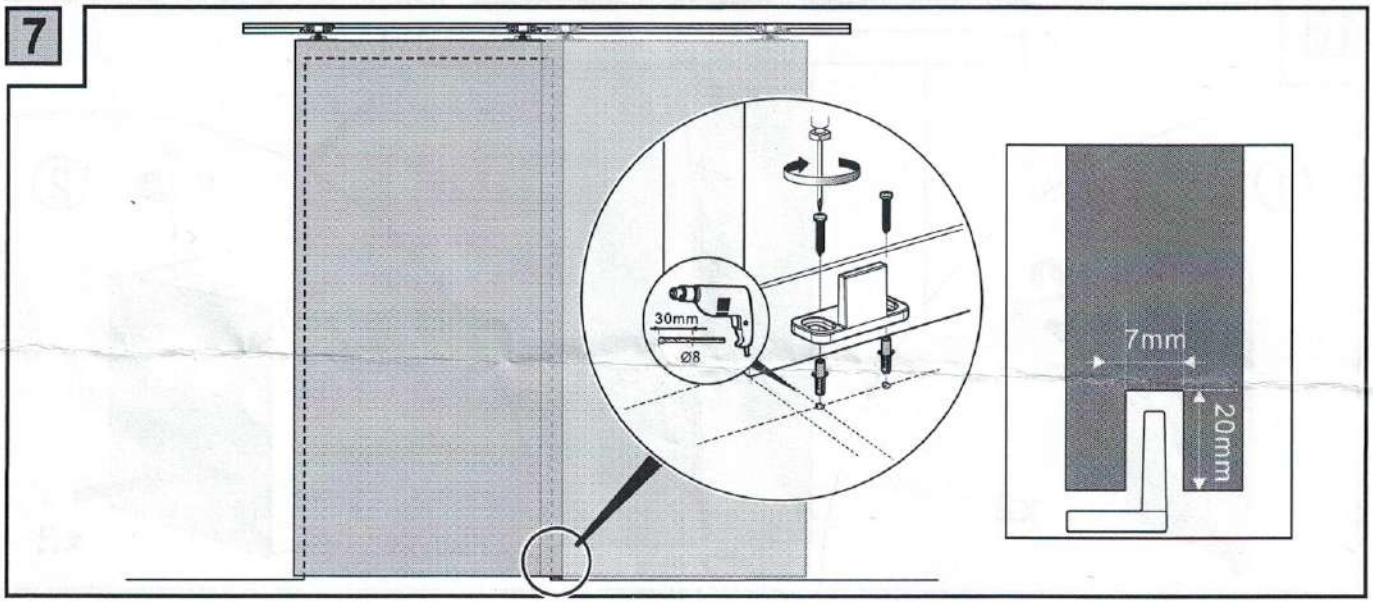
7
30mm
Ø8
7mm
20mm

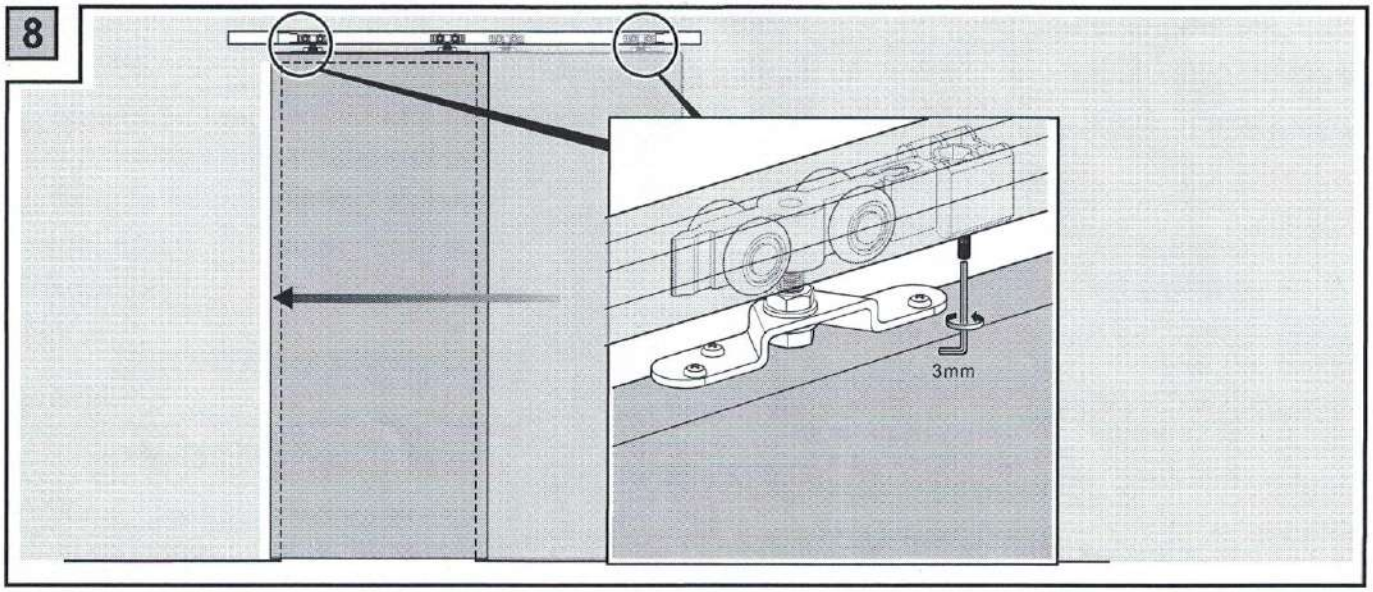
8
3mm

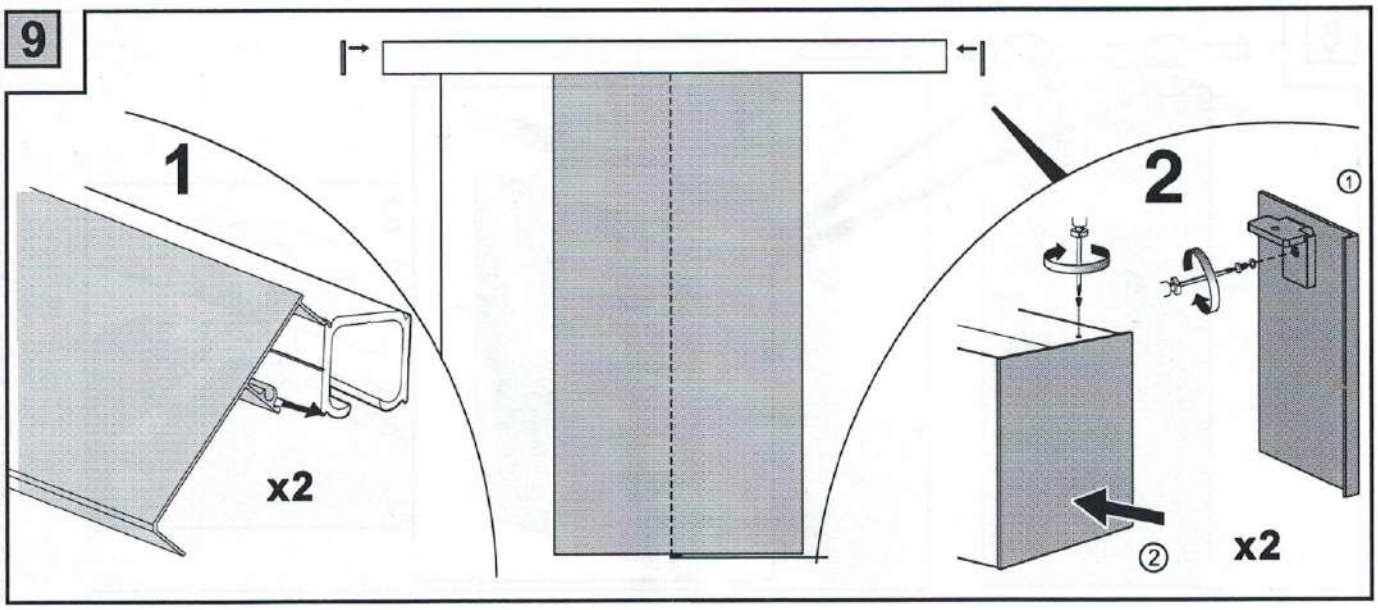
9
1
x2
2
①
②
x2

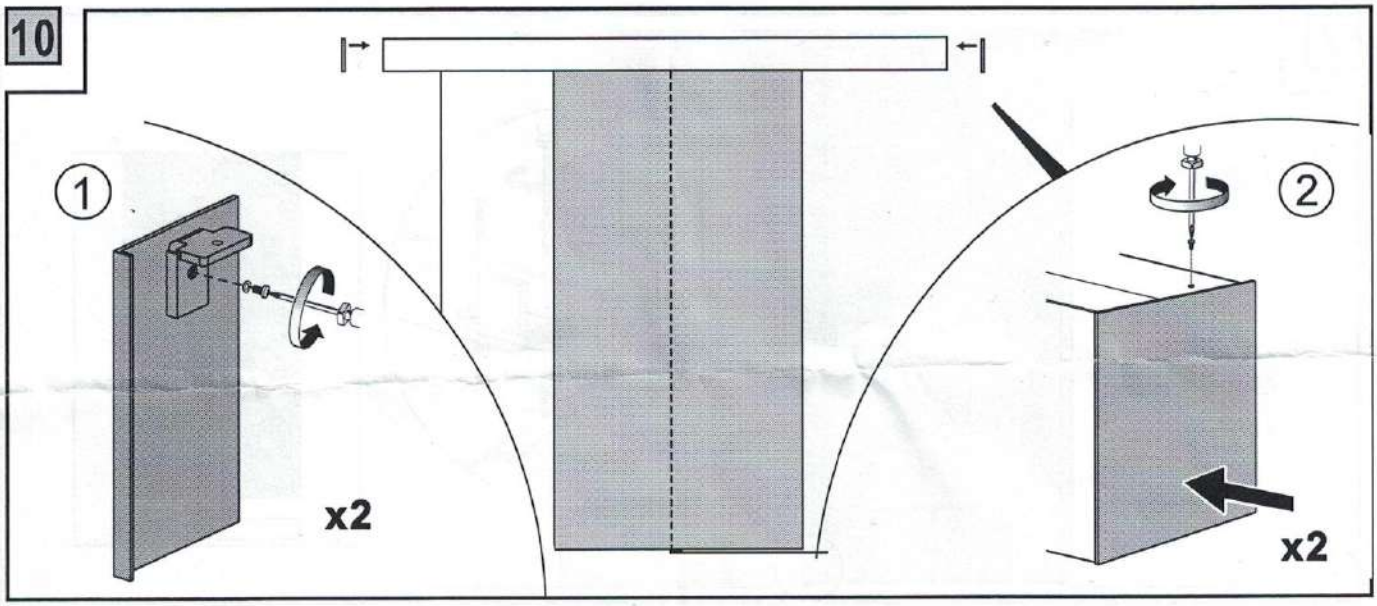
10
①
x2
②
x2