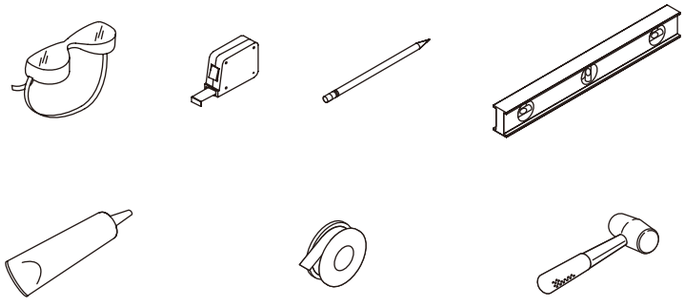

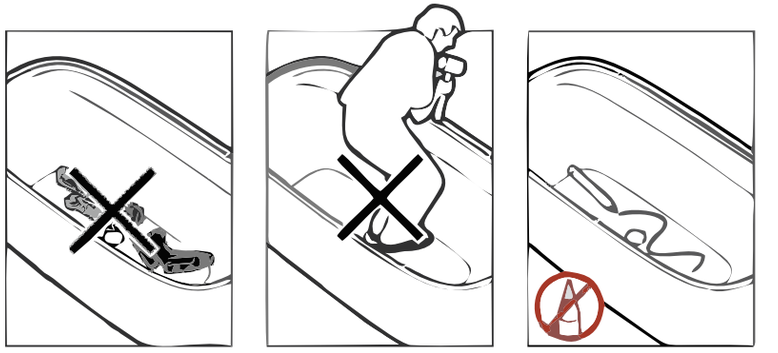

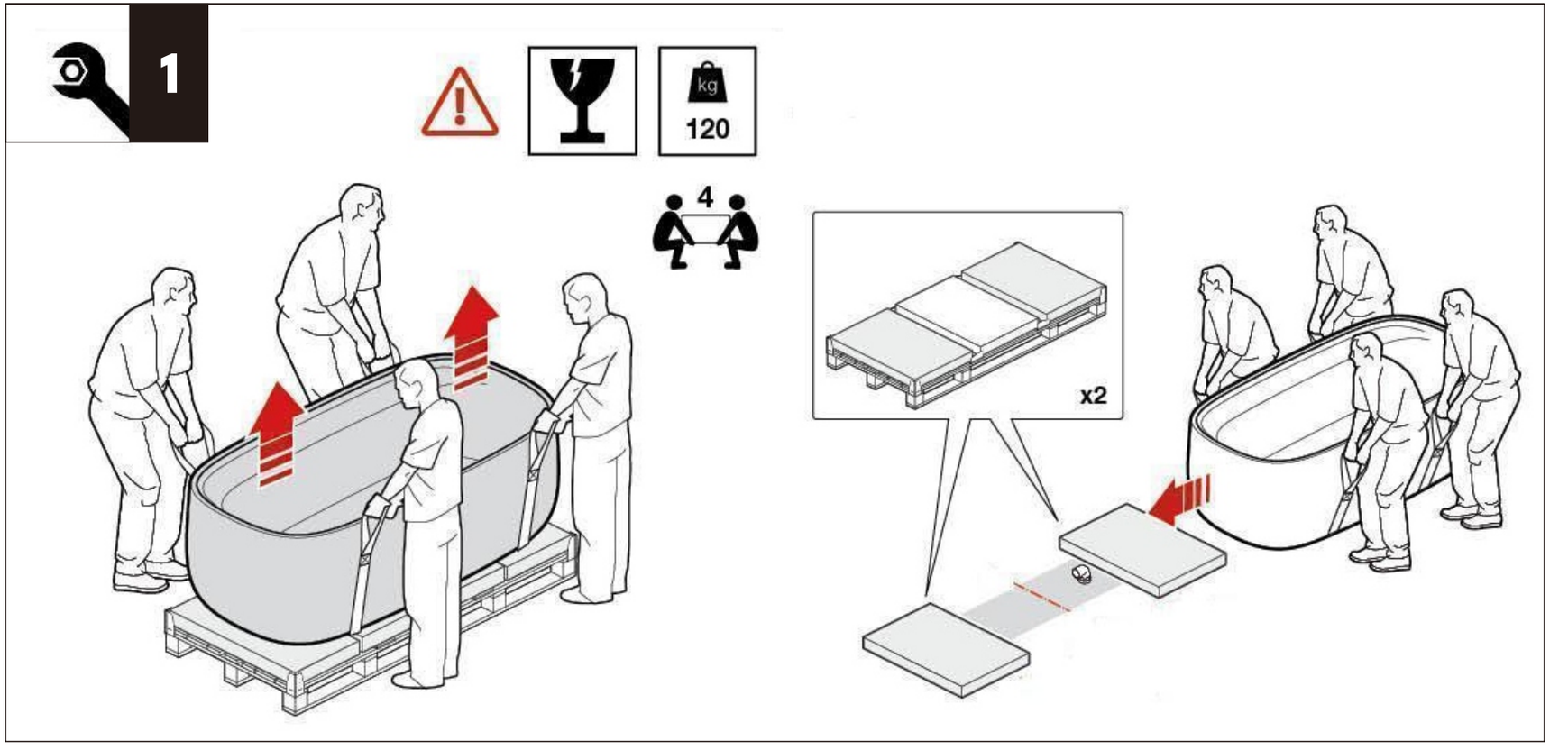
1
kg
120
4
x2

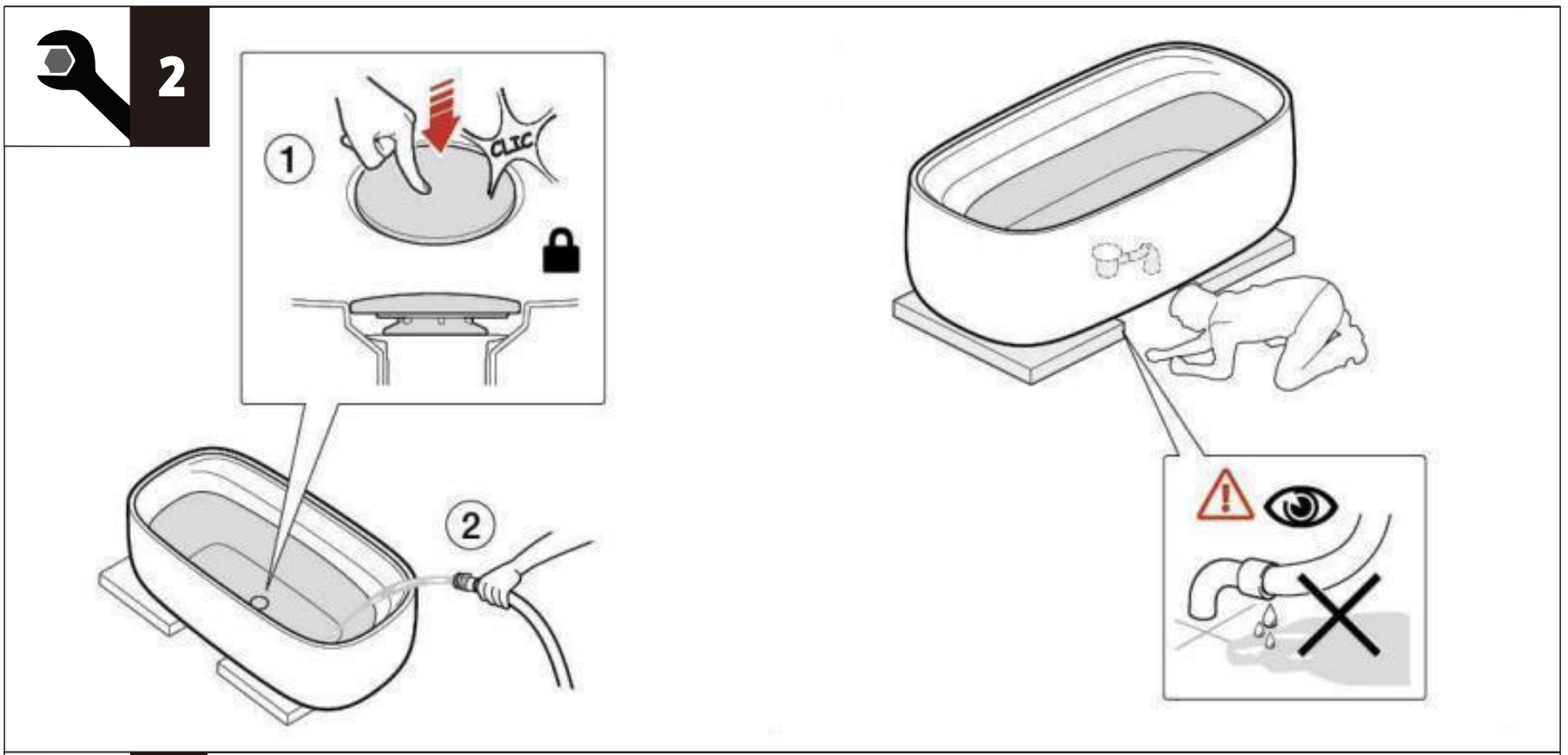
2
1
CLIC
2

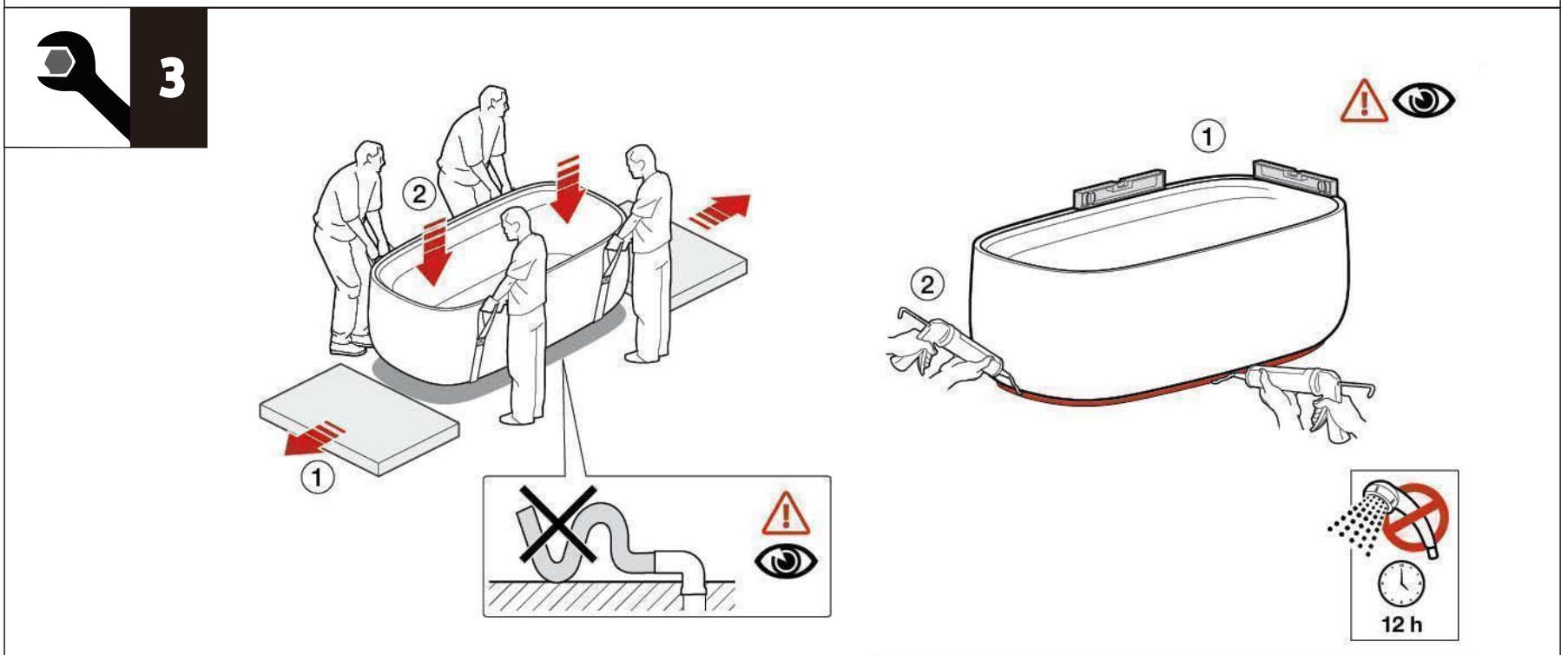
3
2
1
1
2
12 h

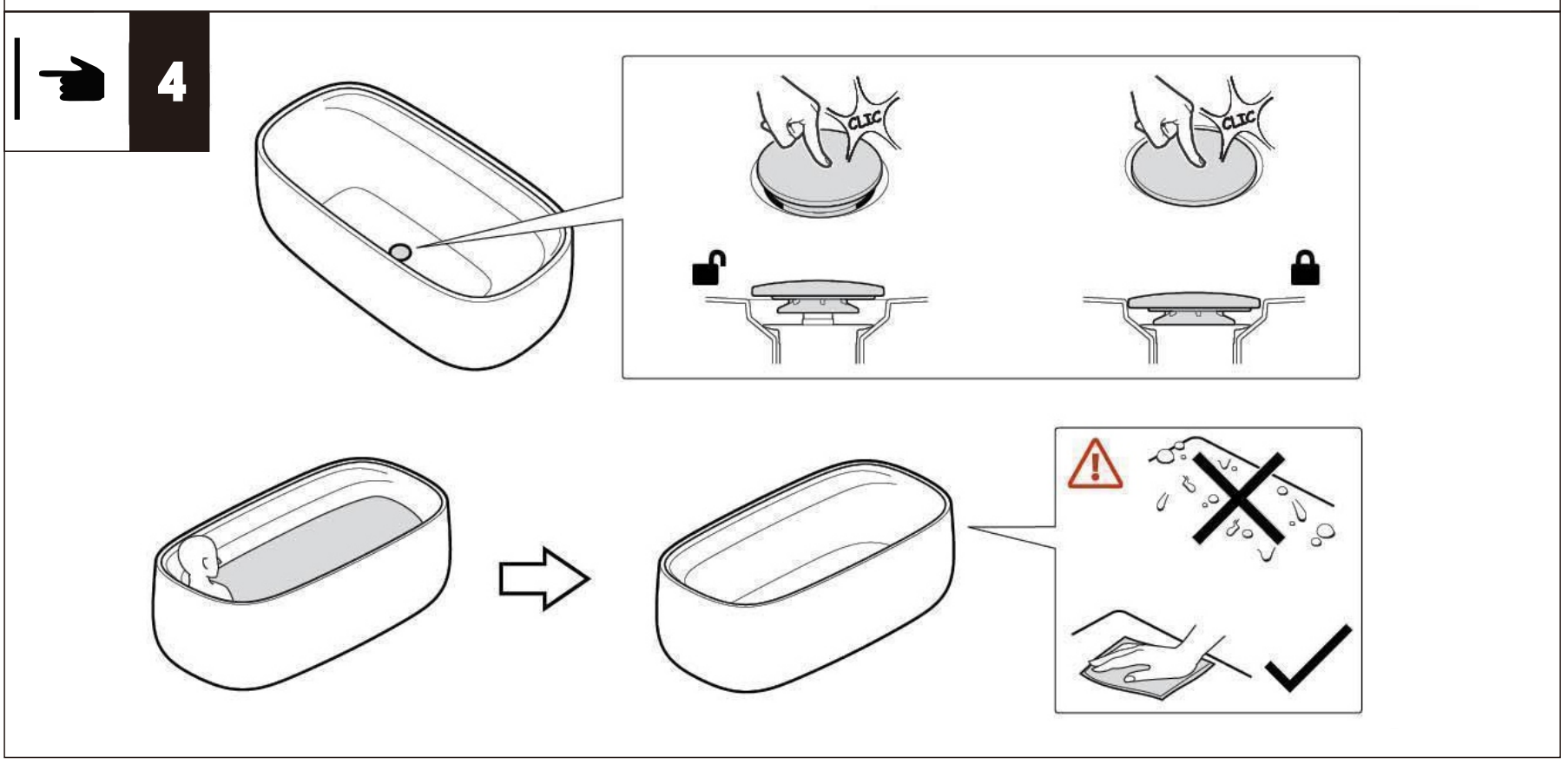
4
CLIC
CLIC

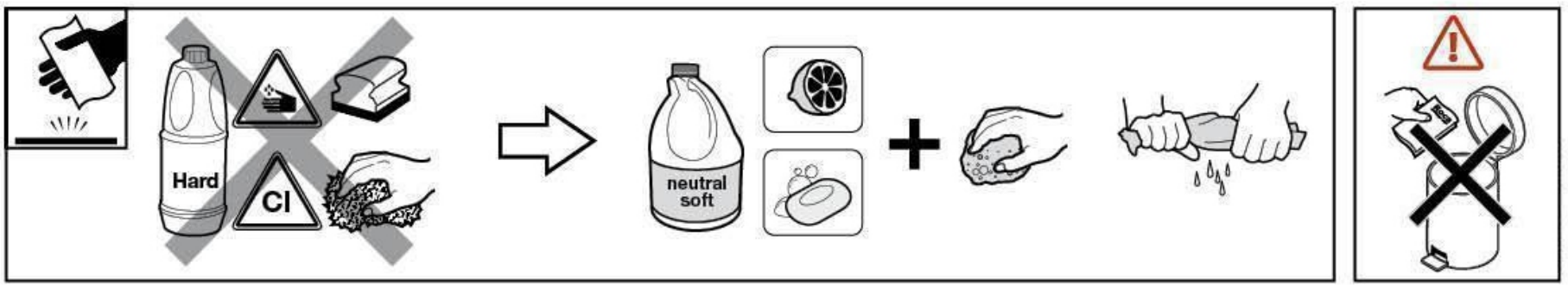
Hard
Cl
neutral
soft