HT_INDUSTRIEL_TABLE
1200mm
Start

WEIGHT: 8KG

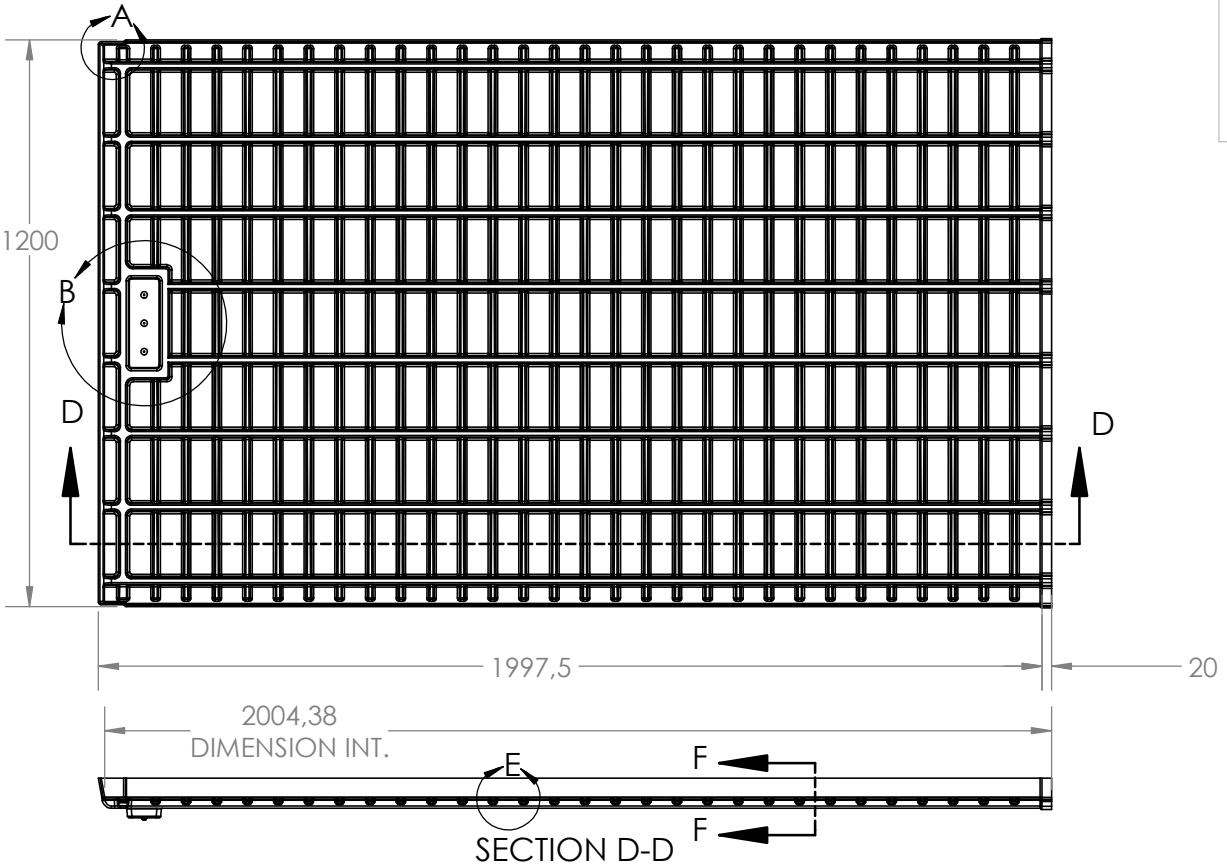

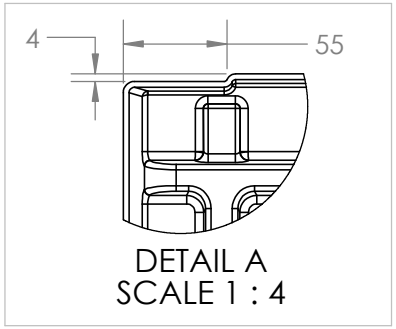

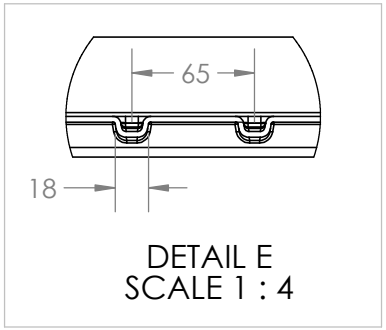

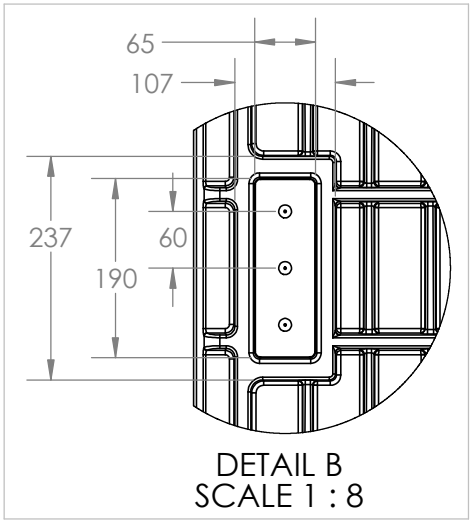

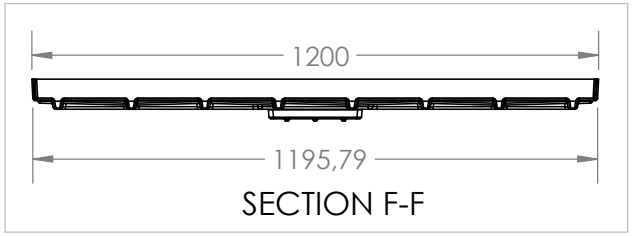

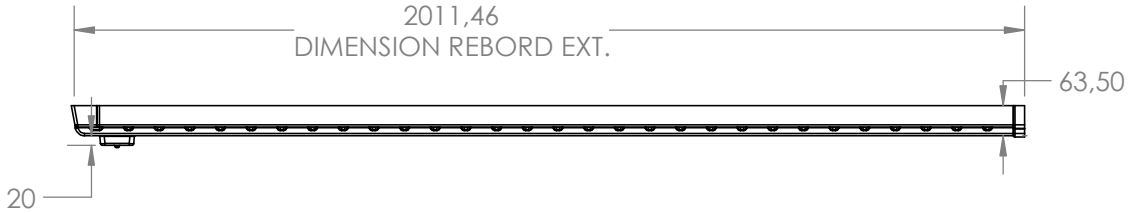

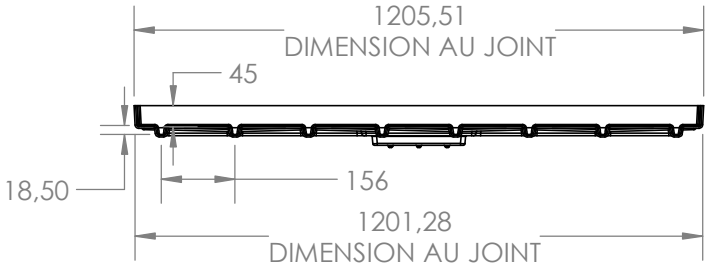

HYDROTEK
12300 rue de l'Avenir
Mirabel, QC, Canada, J7J 2K4

Tool Free: 1-877-777-0767
Orders Fax: 1-866-433-1577
Email: info@hydrotek.ca

CLIENT: **XXXXXX**	DIMENSIONS ARE IN: MM	**PROPRIETARY & CONFIDENTIAL**	**DRAWN: Alain Barabé**
PROJET: TC_1200mm	MATERIAL: xxxxx	THE INFORMATION CONTAINED IN THIS DRAWING IS THE SOLE PROPERTY OF QUALIPLAST. ANY REPRODUCTION IN PART OR AS A WHOLE WITHOUT THE WRITTEN PERMISSION OF QUALIPLAST IS PROHIBITED.	DATE: 2019-05-03
PART NAME :	ÉPAISSEUR INITIAL DU PLASTIQUE:	Rev.:	SCALE: 1:16 SHEET NO. 1/3
PART NO: X	REVISION: P.LECLAIR		