SUPER PUMA

Please use the specifications as a guideline only.

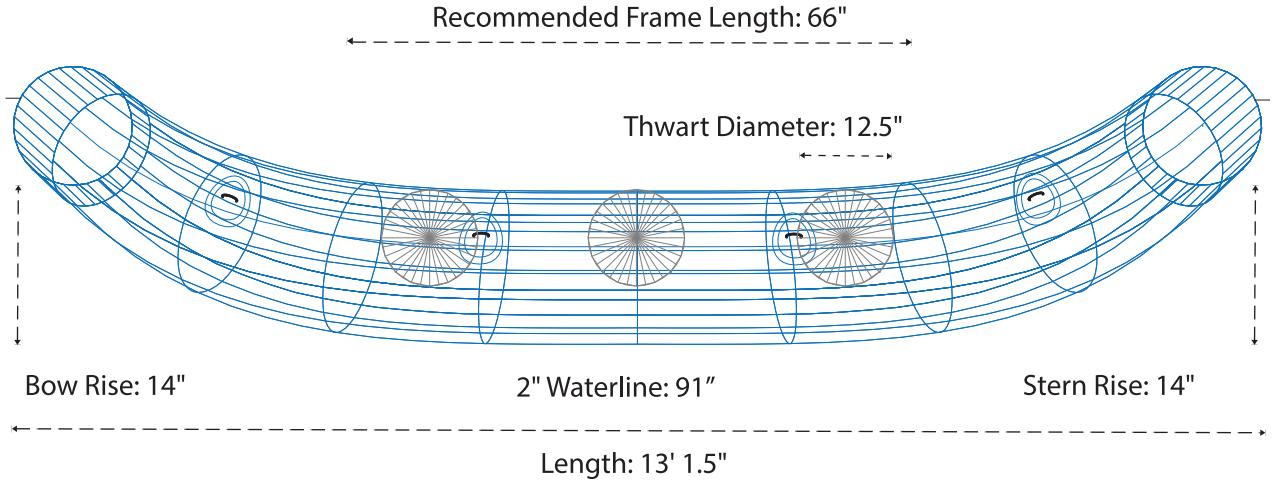

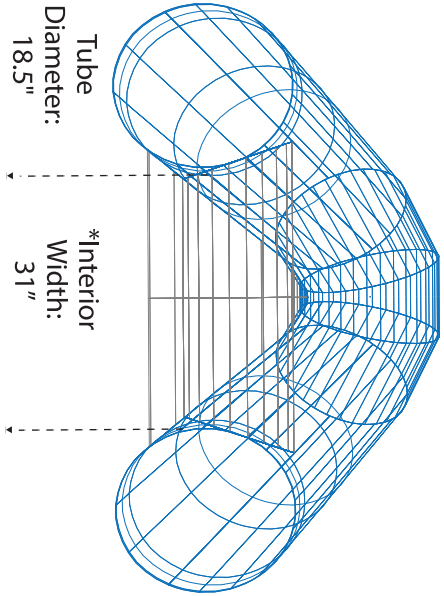

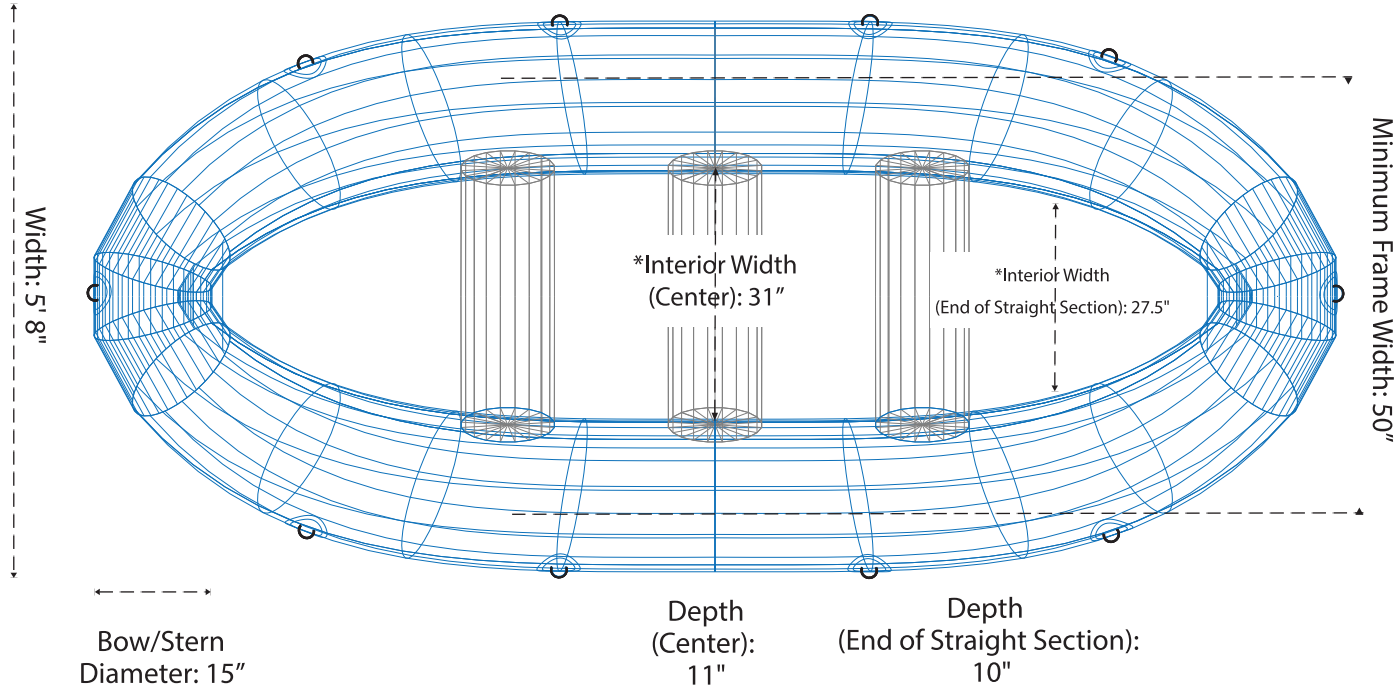

800-247-3432 ~ info@aire.com

www.aire.com

AIRE & Tributary boats are handcrafted by skilled professionals. As with all handcrafted items, there may be some slight variations from boat to boat, all messurements are subject to 1" + or - variation.

*Measured with no thwarts installed