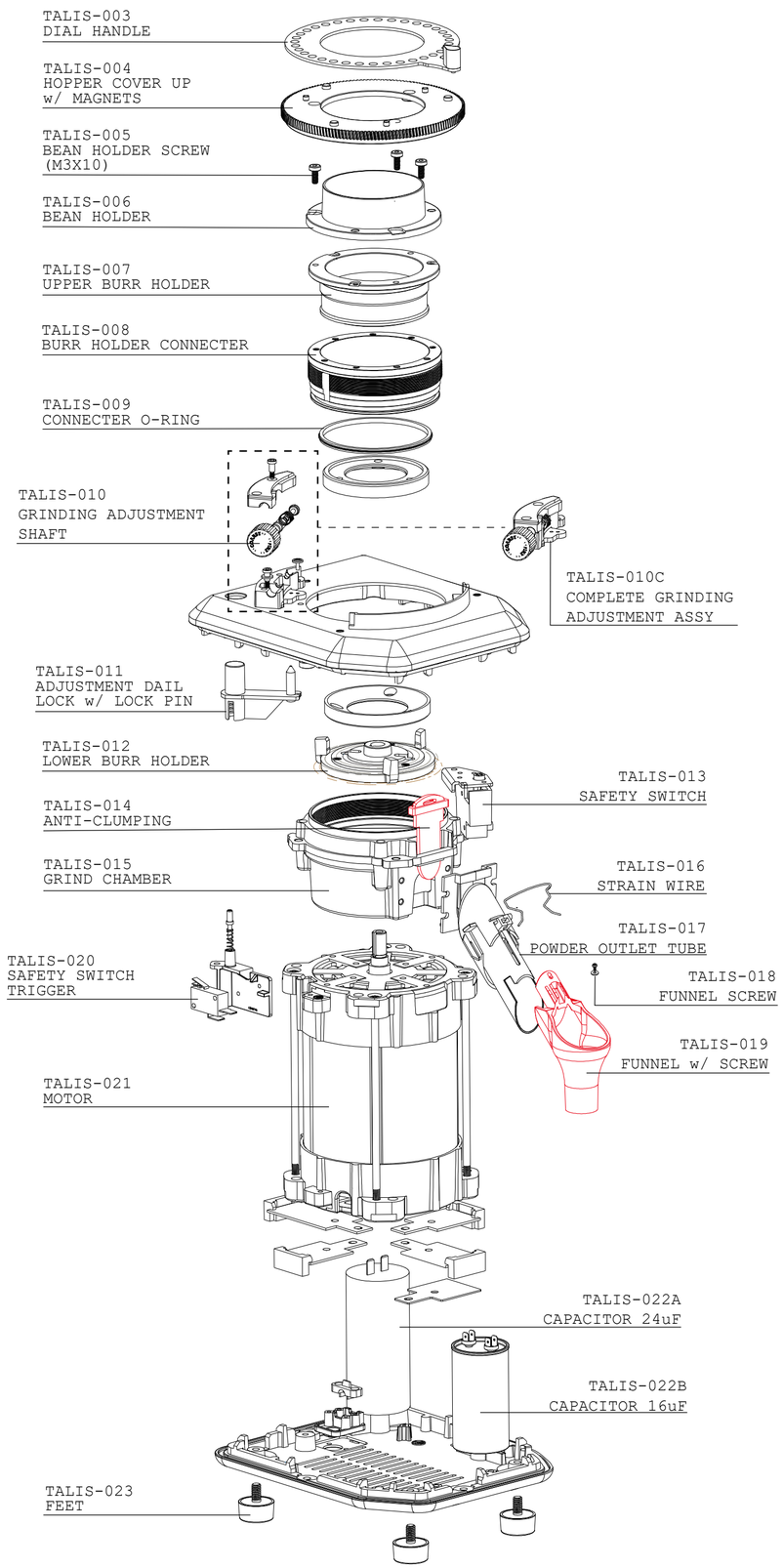

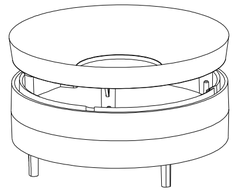

TALIS-002
EXTENSION KITS

S75-001
75mm STEEL FLAT BURRS

S75-002
75mm DLC DIAMOND COATED BURRS

S75-013
75mm TITANIUM COATED BURRS

HONEYCOMB SIDE PANEL

SPSS-TALIS-001SV
BLACK & SILVER 1PAIR

SPSS-TALIS-001WH
WHITE 1PAIR

SPSS-TALIS-001RD
RED 1PAIR

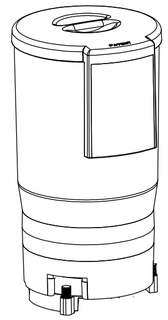

TALIS-043
ZERO GRAVITY HOPPER

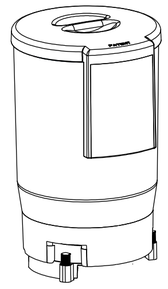

TALIS-044
NORMAL HOPPER

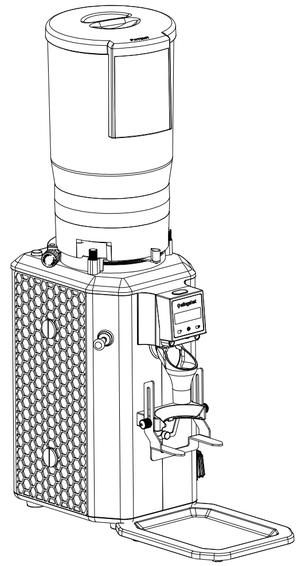

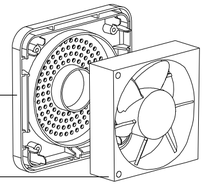

TALIS-024
FAN DRUM

TALIS-025
FAN

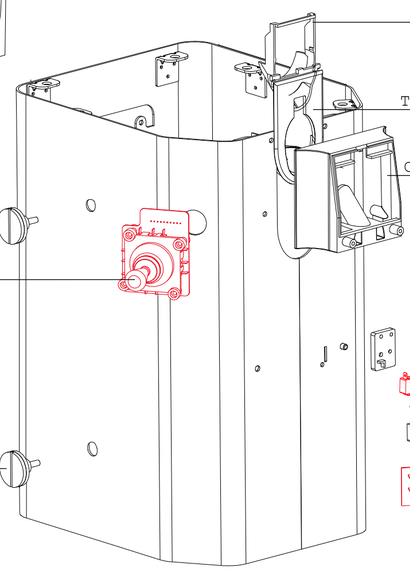

TALIS-029
TUNNEL BUFFER

TALIS-030
TUNNEL BRACKET

TALIS-031
CONTROL PANEL ADPATOR

TALIS-026
JOYSTICK

TALIS-027
SIDE PANEL SCREW w/ RUBBER CAP

TALIS-032
CPU BOARD

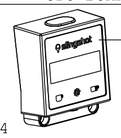

TALIS-033
CONTROL PANEL COVER

TALIS-034
MICRO SWITCH

TALIS-035
MAIN ROCKER SWITCH

TALIS-036
MICRO SWITCH SPRING

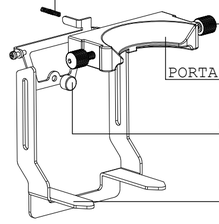

TALIS-037
HOLDER SCREW

TALIS-038
PORTAFILTER TOP HOLDER

TALIS-039
PUSH SWITCH COVER

TALIS-040
PORTAFILTER
BOTTOM HOLDER

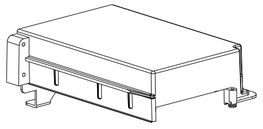

TALIS-028
POWER BOARD

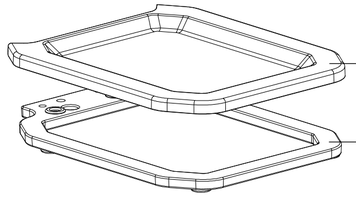

TALIS-041
TRAY

TALIS-042
TRAY BRACKET

SLINGSHOT TECHNOLOGY CORPORATION LTD.

MODEL: TALIS S75
EDIT VERSION: 2024-001