Top View

Waste to Floor Distance Should be 105 mm

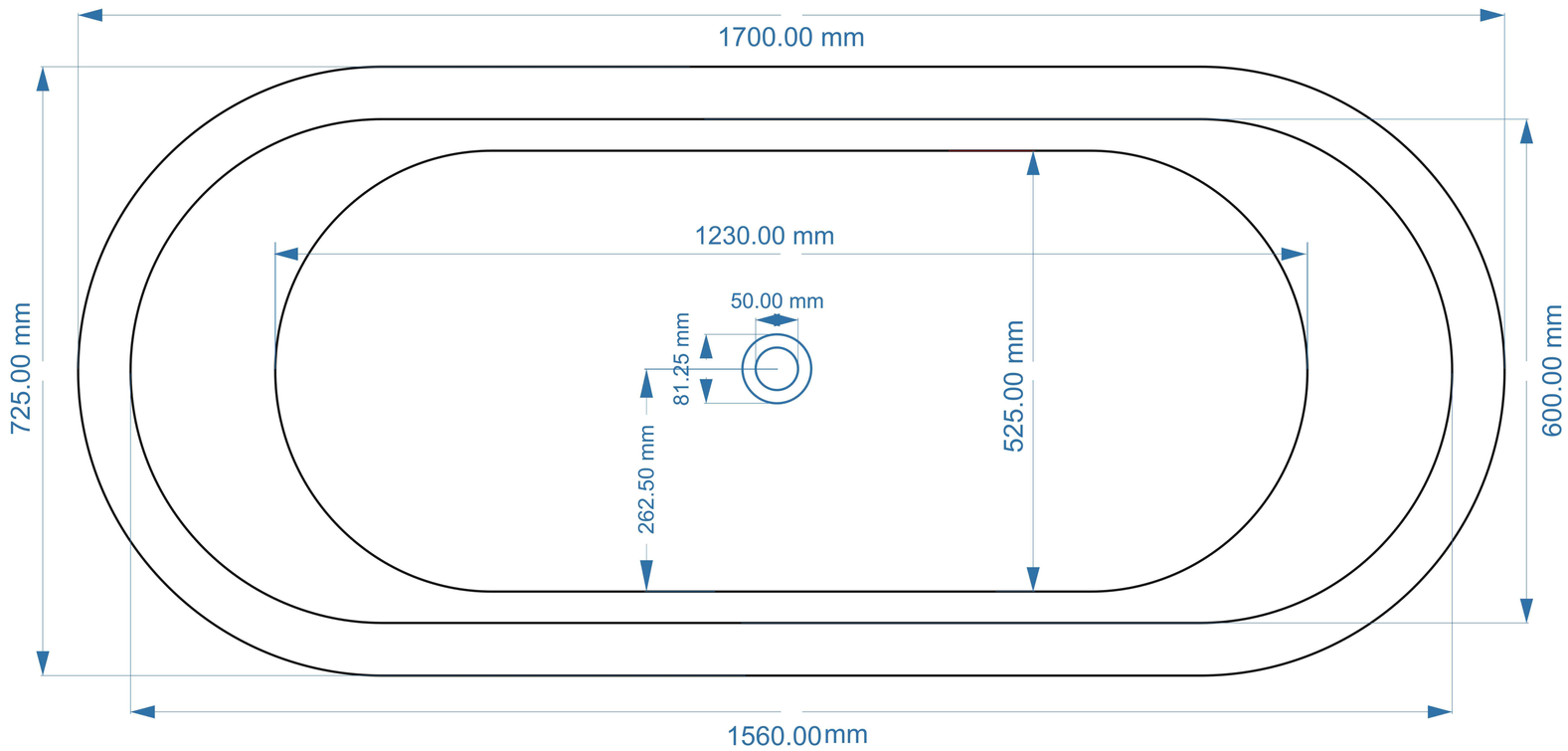

Front View

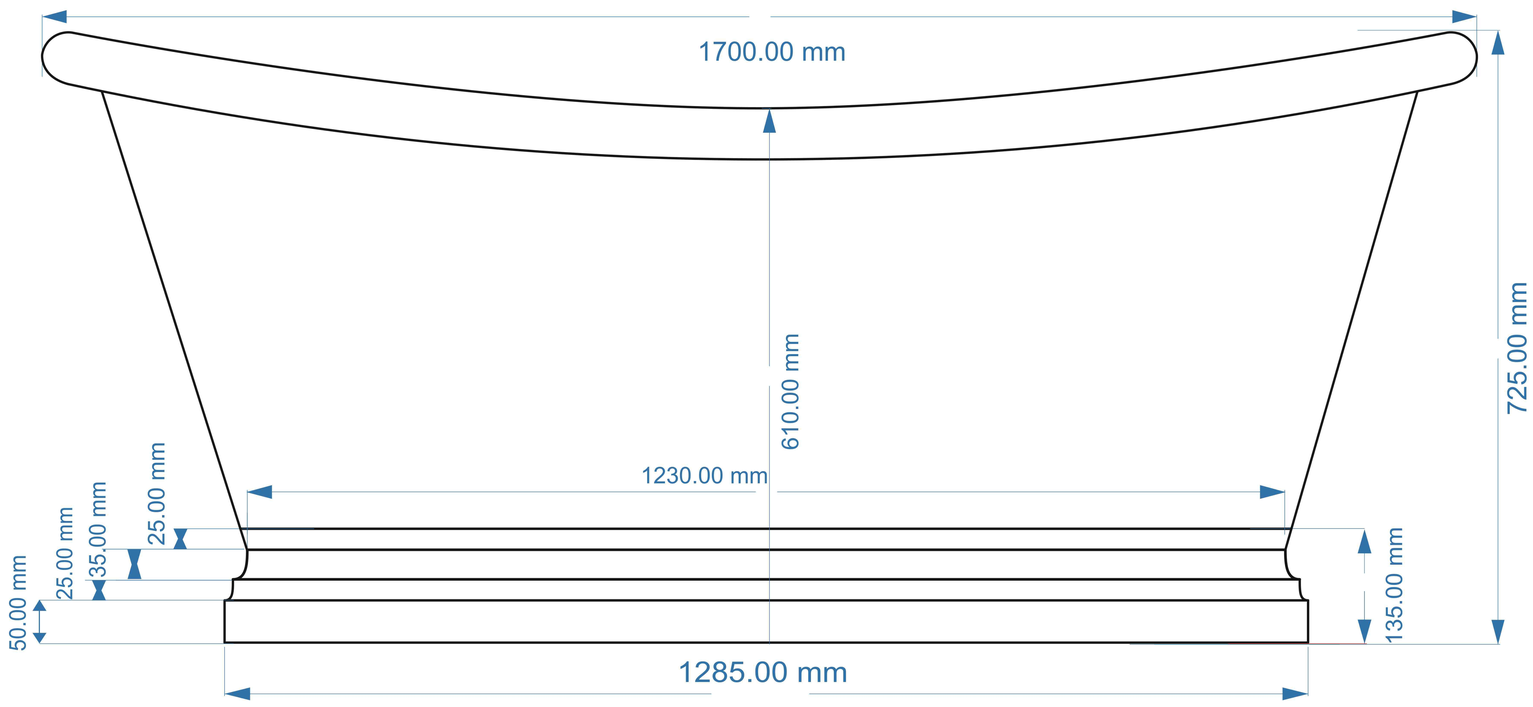
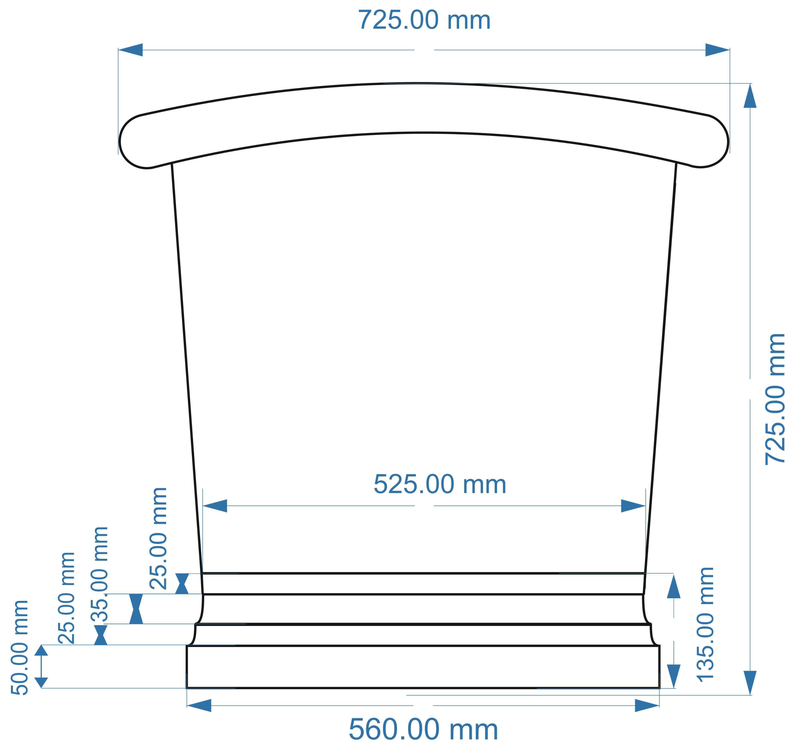
Side View