2-Channel Analog Output Module 0-20 mA, Ex i

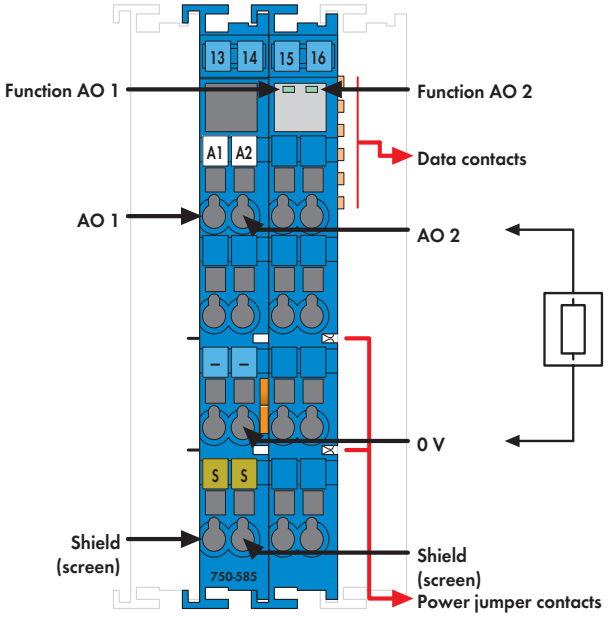

Delivered without miniature WSB markers

The analog output modules transmits intrinsically safe 0/4 - 20mA signals in the hazardous Zone 0+1.
The WAGO-I/O-SYSTEM 750 must be installed either in Zone 2 or in a non-hazardous area.
Power is derived from the power jumper contacts.
The outputs are short-circuit proof.

LED displays:
- Green LED (output status)

Field and system levels are electrically isolated.

Note: The analog output module must only be operated via Ex i 24VDC power supply!

General information (e.g., installation regulations) on explosion protection is available in the WAGO-I/O-SYSTEM 750 manuals!

Description	Item No.	Pack. Unit
2AO 0-20mA Ex i	**750-585**	1
2AO 4-20 mA Ex i	**750-586**	1

Accessories		Item No.	Pack. Unit
Miniature WSB Quick marking system			
	plain	**248-501**	5
	with marking	see Section 11	

Technical Data	
No. of outputs	2
Current consumption, system voltage typ.	
(5 VDC)	21 mA
Voltage via power jumper contacts	24 V DC (provided via Ex-i supply
	U_O = max. 27.3 V)
Signal current	0 ... 20 mA (750-585)
	4 mA ... 20 mA (750-586)
Load impedance	< 500 Ω
Linearity	± 2 LSB
Resolution	12 bits
Conversion time	< 2 ms
Output error 25 °C	< ± 0.2 % of the full scale value
Temperature coefficient	< ± 0.01 % / K of the full scale value
Current consumption, power jumper	
contact typ. (24 VDC)	19 mA + load (2 x 20 mA)
Power consumption $P_{max.}$	1.5 W
Power loss P_V	0.9 W
Isolation	U_M = 375 V system/supply
Bit width	2 x 16 bits data

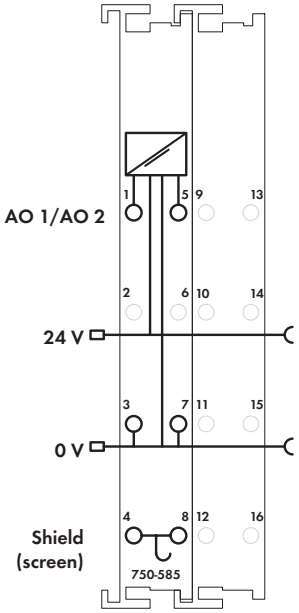

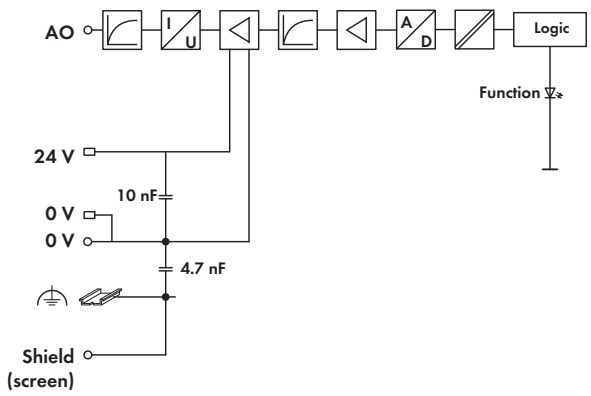

Technical Data

Wire connection	CAGE CLAMP®
Cross sections	0.08 mm² ... 2.5 mm² / AWG 28 ... 14
Strip lengths	8 ... 9 mm / 0.33 in
Width	24 mm
Weight	58.5 g
EMC immunity of interference	acc. to EN 61000-6-2, marine applications
EMC emission of interference	acc. to EN 61000-6-3, marine applications

Explosion Protection

Electric circuit, safety-relevant data	U_o = 27.3 V ; I_o = 57.5 mA; P_o = 392 mW; Characteristic: Linear
Reactances Ex ia IIC	L_o = 11 mH; C_o = 88 nF
Reactances Ex ia IIB	L_o = 56 mH; C_o = 680 nF
Reactances Ex ia IIA	L_o = 90 mH; C_o = 2.2 µF
Reactances Ex ia I	L_o = 110 mH; C_o = 3.5 µF
Reactances	(The above-listed ratings do not account for the coincidental occurrence of capacitances and inductances. For ratings taking the coincidental occurrence of capacitances and inductances into account, see manual)

Standards, Guidelines and Approvals

Conformity marking	CE
ATEX Guideline 2014/34/EU	EN 60079-0, -7, -11, -26, -31
EC EMC guideline 2014/30/EU	
Korea Certification	
Marine applications	ABS[1], BV[1], DNV[1], GL, KR[1], LR[1], NKK[1], PRS[1], RINA[1]
E175199 Ordinary Locations	
TÜV 12 ATEX 106032 X	I M2 (M1) Ex d [ia Ma] I Mb, II 3 (1) G Ex ec [ia Ga] IIC T4 Gc, II 3 (1) D Ex tc [ia Da] IIIC T135°C Dc
IECEx TUN 12.0039 X	Ex d [ia Ma] I Mb, Ex ec [ia Ga] IIC T4 Gc, Ex tc [ia Da] IIIC T135°C Dc
TÜV 14.1911 X	Ex d [ia Ma] I Mb, Ex nA [ia Ga] IIC T4 Gc, Ex tc [ia Da] IIIC T135 °C Dc
UL E480271 Hazardous Locations (Zone classified)	Cl I Zn 2 AEx nA [ia Ga] IIC T4 Gc Cl I Zn 2 AEx nA [ia IIIC] IIC T4 Gc Ex nA [ia Ga] IIC T4 Gc X Ex nA [ia IIIC] IIC T4 Gc X
UL E198726 Hazardous Locations (Division classified)	Class I, Div. 2, Group A B C D, T4

[1] Does not apply to 750-586