PRODUCT DATA SHEET - CORE DESK

bouncepad®

Tablet attachment:	Arm:	Mounting:	Packaged weight:	Colour:
Core	Desk	Fixing from **below** Fixing from **Above**	0.96kg	White Black

Mounting:
Fixing from Below

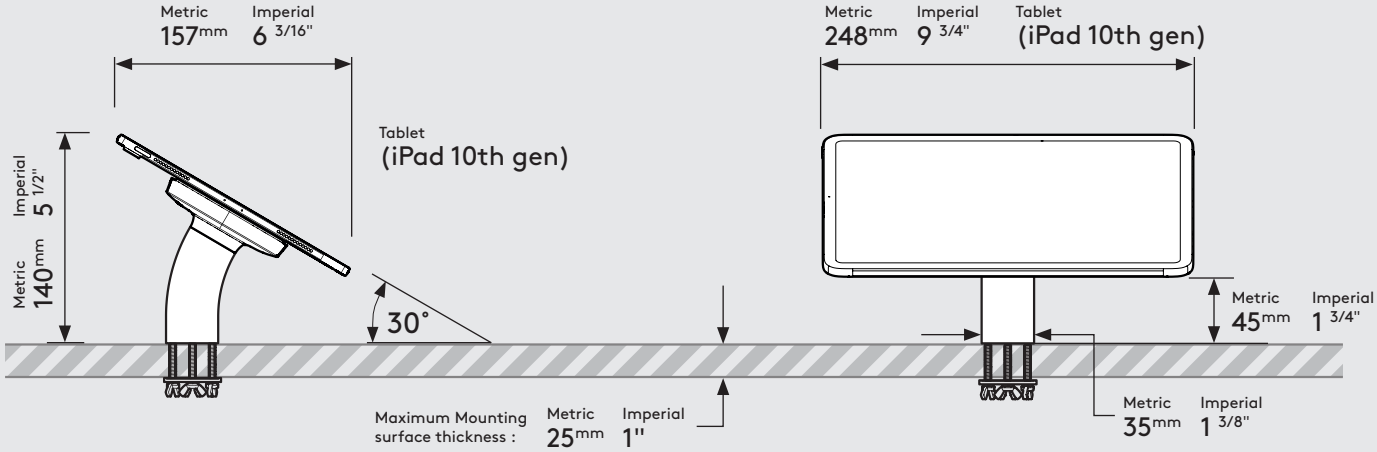

Mounting:
Fixing from Above

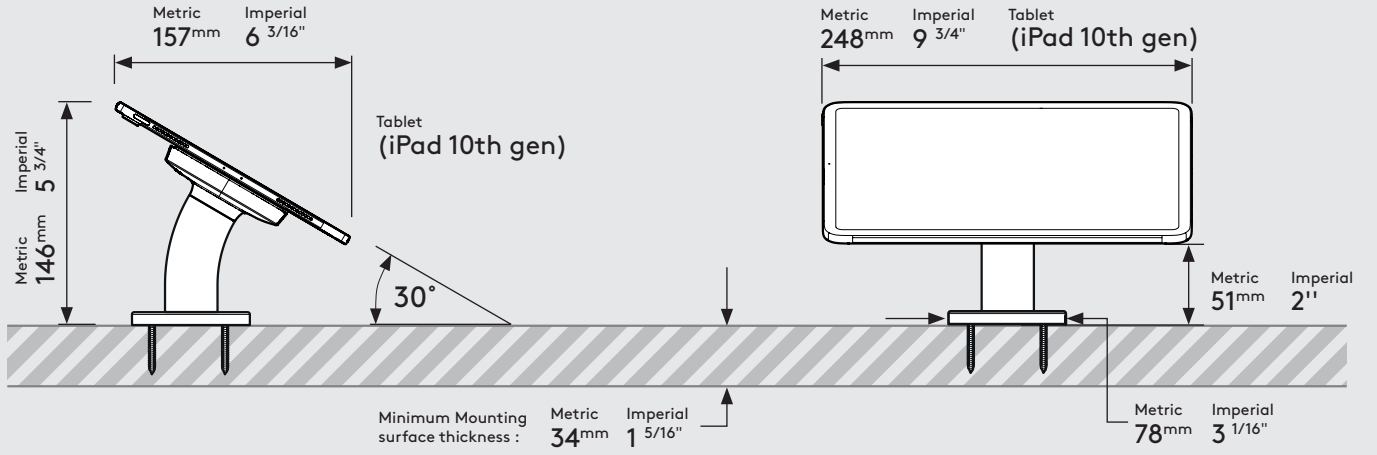

Parts in the Box

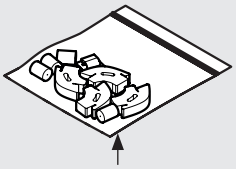

Tablet Set-up Kit

Fixings Kit

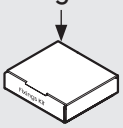

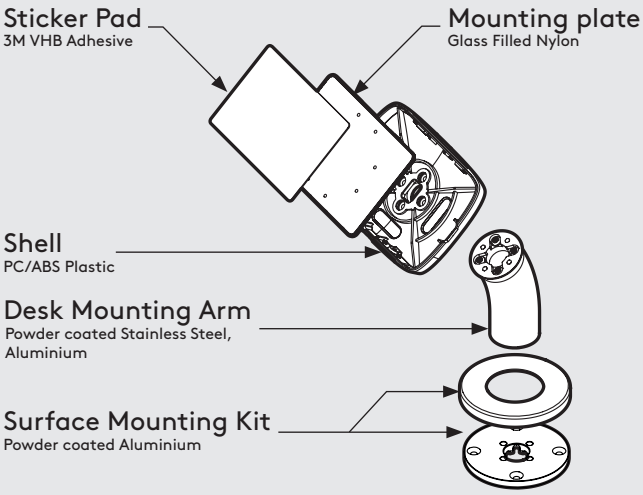

Sheet Code: BP-DAT-CDSK_REV0
Release Date: 20/05/2024

Copyright 2016 Spotspot Ltd. (T/A Bouncepad) all rights reserved.
Confidential, no part of this publication may be reproduced or transmitted in any form without the written permission of the copyright holder.