This Template Applies To ***Customer:***

Bandanna

● 2021Bandanna

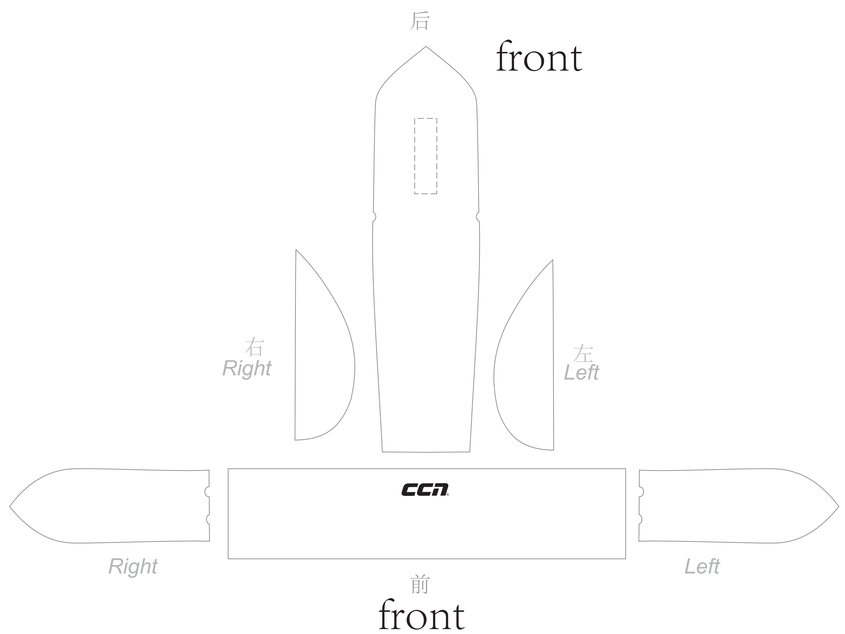

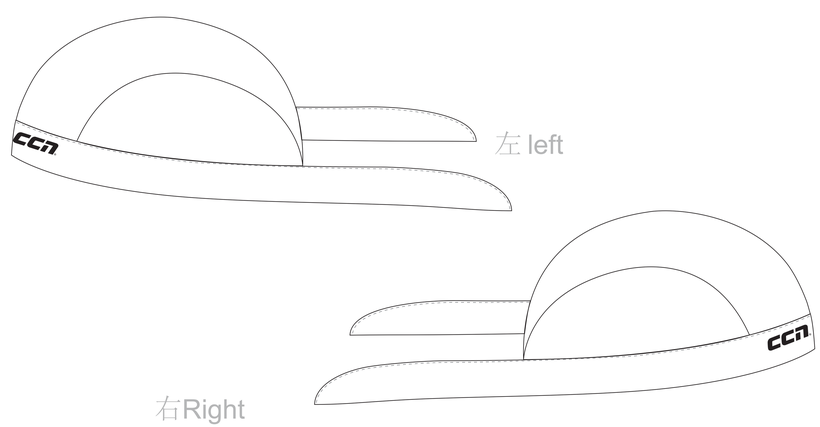

I have reviewed and approve the art work for the printing of these garments. I understand that this approval is final. I accept responsibility for any errors that may be shown in the art work including but not limited to missing or misplaced logos, undesirable colors and graphic errors.

Approved By: Date:

Customer Checklist
- ☐ All Logos Included
- ☐ Logos Correctly Placed
- ☐ Spelling
- ☐ Registration/ Trade Marks
- ☐ Design

Customer acknowledges that they assume full responsibility for having obtained legal permission for the use of each logo or image that appears in the artwork for the purpose of producing this athletic garment.

◎ **Lycra Arm Warmers**

Body : Printable Elastane (K005)

◎ **Fleece Arm Warmers**

Body : Printable Fleece Elastane (F002)

LYCRA COLOR OPTIONS:

Full Sublimation

Selected Colors Legend

- *PMS*
- *PMS*
- *PMS*
- *PMS*
- *PMS*
- *PMS*

Comments:

Accessories

Arm Warmer								
Size	2XS	XS	S	M	L	XL	2XL	
Bicep(CM)	2 2-24	2 5-27	28-30	31-33	34-37	38-41	42 -45	
Leg/Knee Warmer								
Size	2XS	XS	S	M	L	XL	2XL	
Thigh(CM)	47-49	50-52	53-55	56-58	59-62	63-66	67-70	

Artist: ***Sales Rep:*** ***Date:***

info@ccnsport.com

Phone (852) 2412 0010
Fax (852) 2412 0202