DAYTONA D-8436 - Specification Sheet

Features

- 3D LED Color Temperature Lights
- 2 Touch sensors with Dimmer and memory function
- Energy efficient LED lighting 3000-6500K CCT
- CRI 80+
- Includes Digital Clock
- Includes Defogger with push button
- MEANWELL brand LED driver (80W)
- Single color (3000K / 6500K) : 2419LM
- Mixed color (4000-4700K) : 4838LM

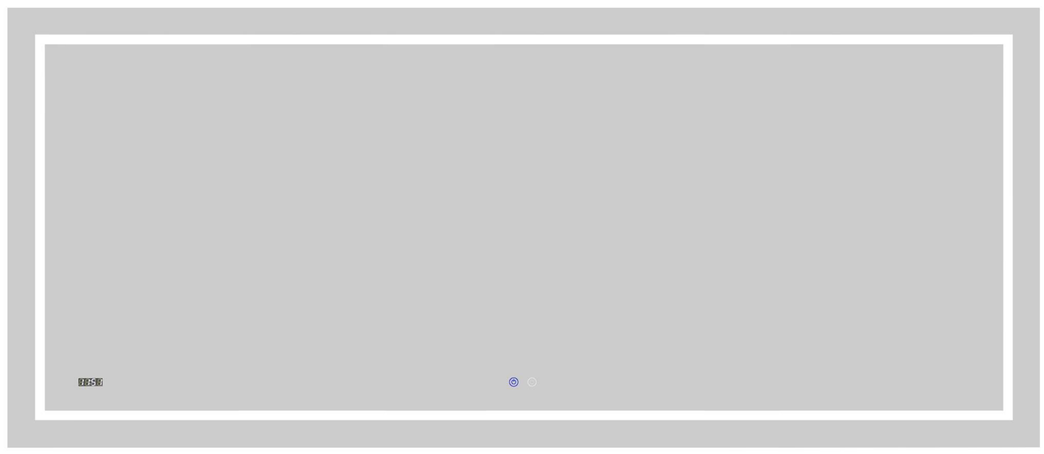

Construction

- Aluminum frame
- Quality polished edge mirror
- Single field wire installation
- Constructed for surface mounting
- Includes installation hardware

Codes/Standards Applicable

- DAYTONA Mirror is ETL certified to:
  - UL 962
  - CSA Standard C22.2 No. 250.0

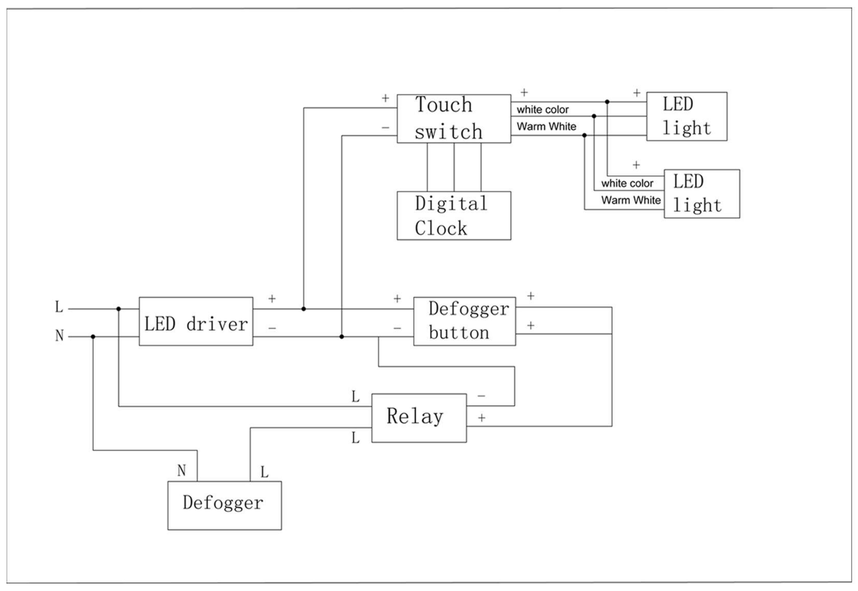

Circuit Diagram

Dimensions

Height: 36" (913 mm)

Width: 84" (2134 mm)

Depth: 1" (26 mm)

Electrical System

- INPUT : 110-240V~ 0.85A 50/60Hz
- OUTPUT : max.13V
- Field Wire location as shown in drawing
- Circuit Diagram

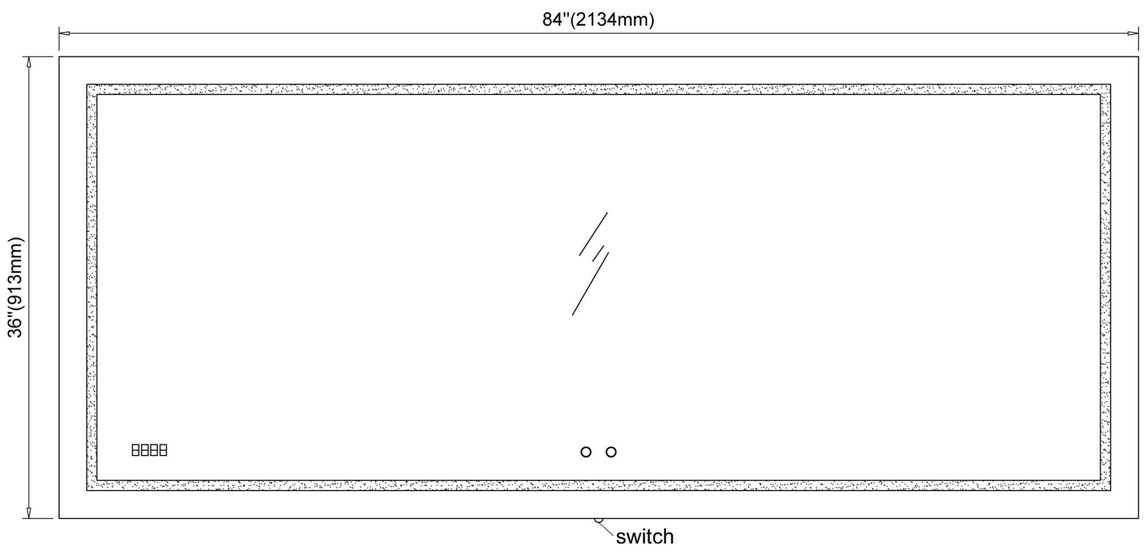

Front view

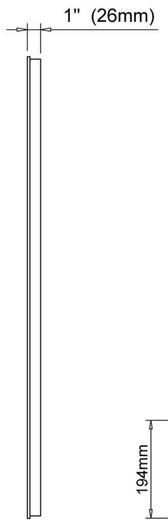

Side view

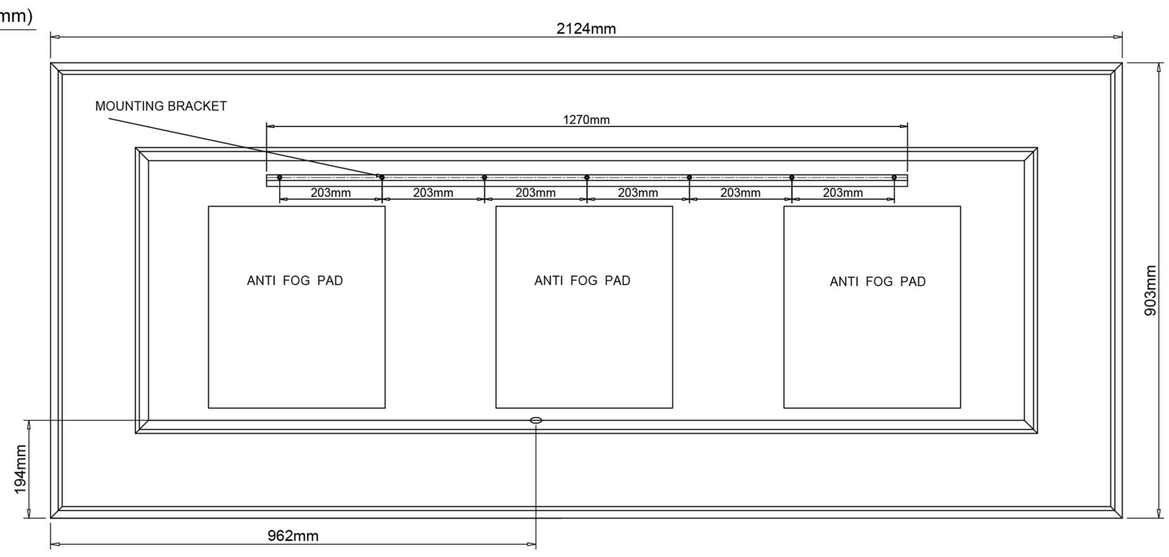

Back view for electrical knockout location