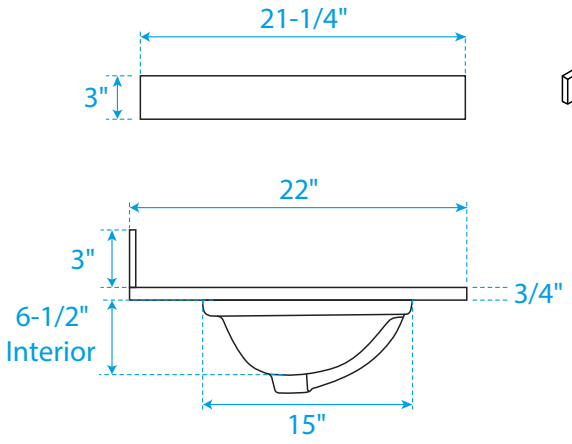

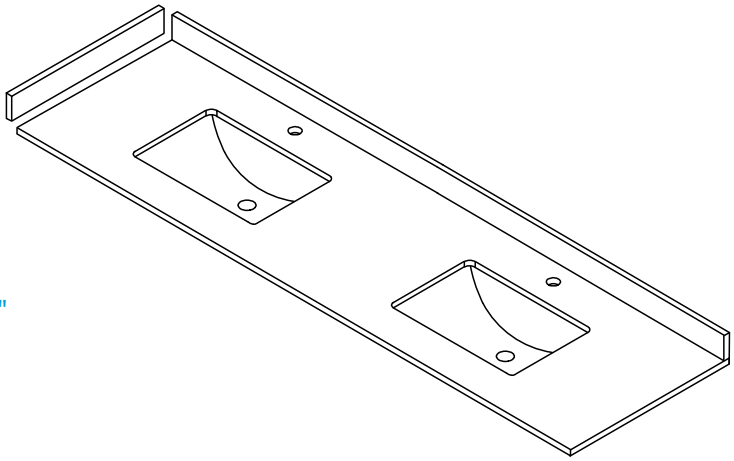

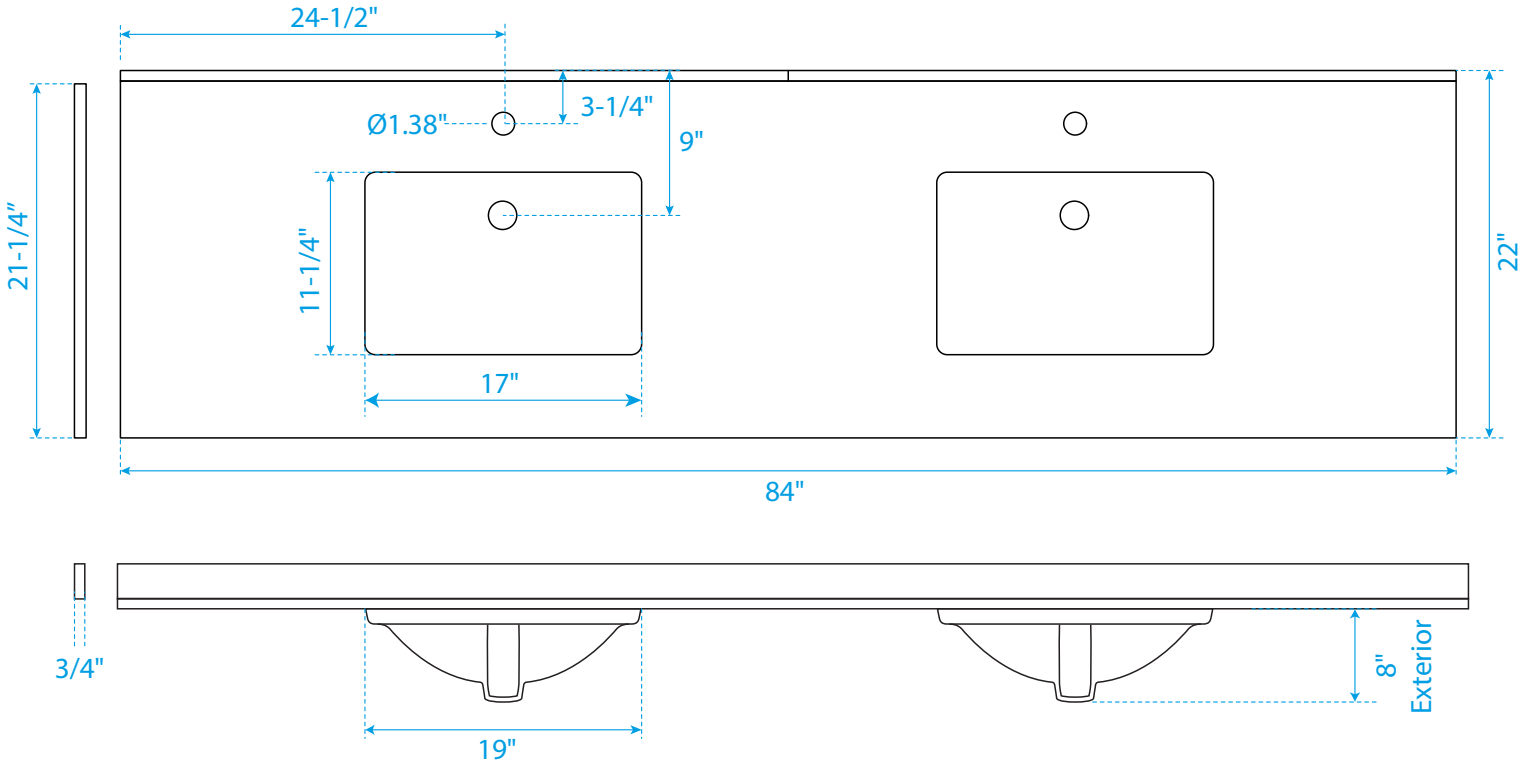

Side splash is reversible.
Note: Due to high probability of breakage, the backsplash comes in two pieces, cut from the same piece. All measurements are ± 1/4".