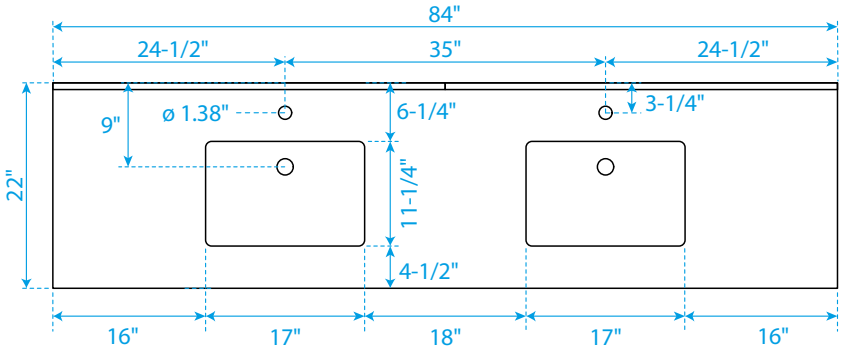


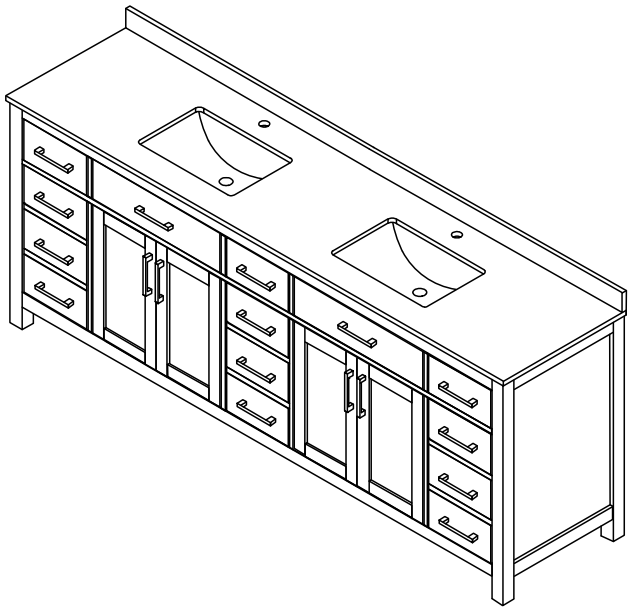

TOP VIEW OF VANITY CABINET

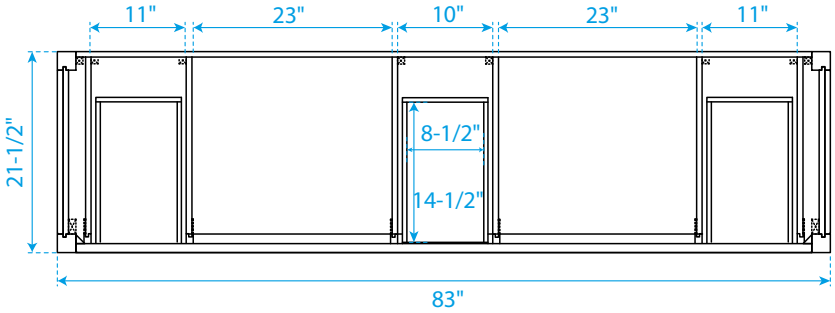


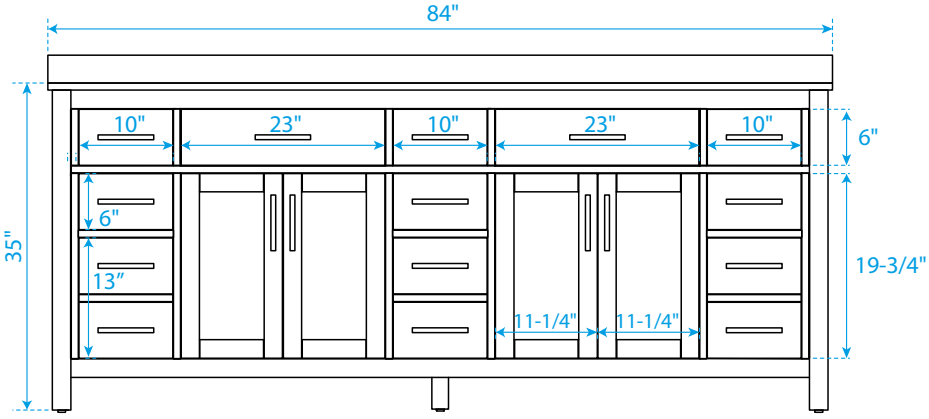


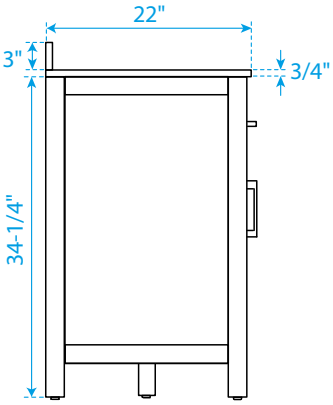


*Note: Due to high probability of breakage, the backsplash comes in two pieces, cut from the same piece. All measurements are ±1/4".