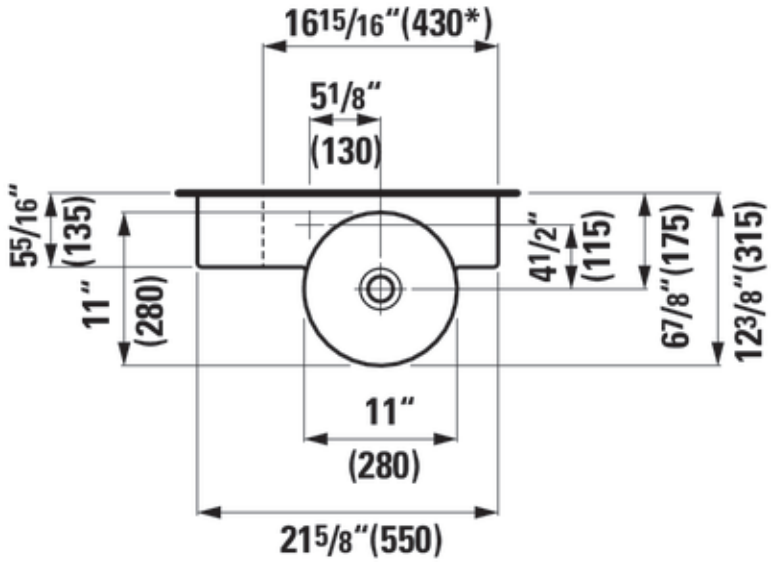
16 15/16" (430*)
5 1/8"
(130)
5 5/16"
(135)
11"
(280)
4 1/2"
(115)
6 7/8" (175)
12 3/8" (315)
11"
(280)
21 5/8" (550)

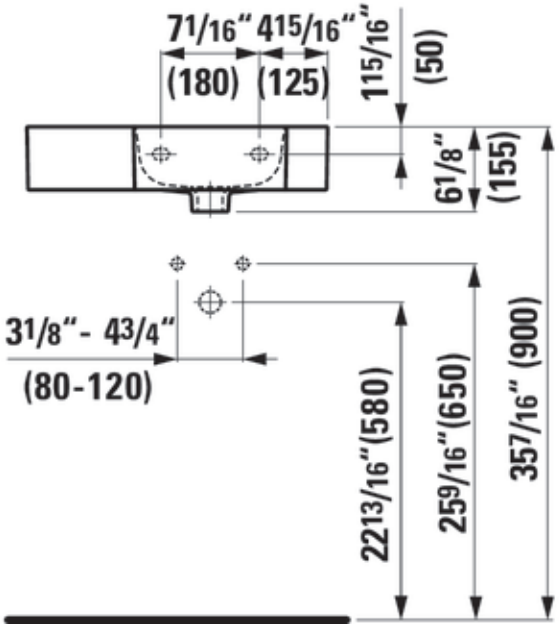
7 1/16"
(180)
4 15/16"
(125)
1 15/16"
(50)
6 1/8"
(155)
3 1/8" - 4 3/4"
(80-120)
22 13/16" (580)
25 9/16" (650)
35 7/16" (900)

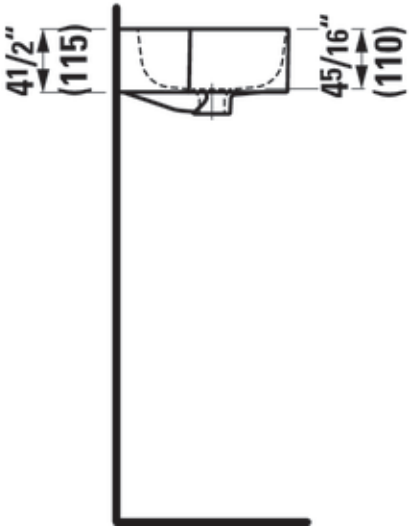
4 1/2"
(115)
4 5/16"
(110)