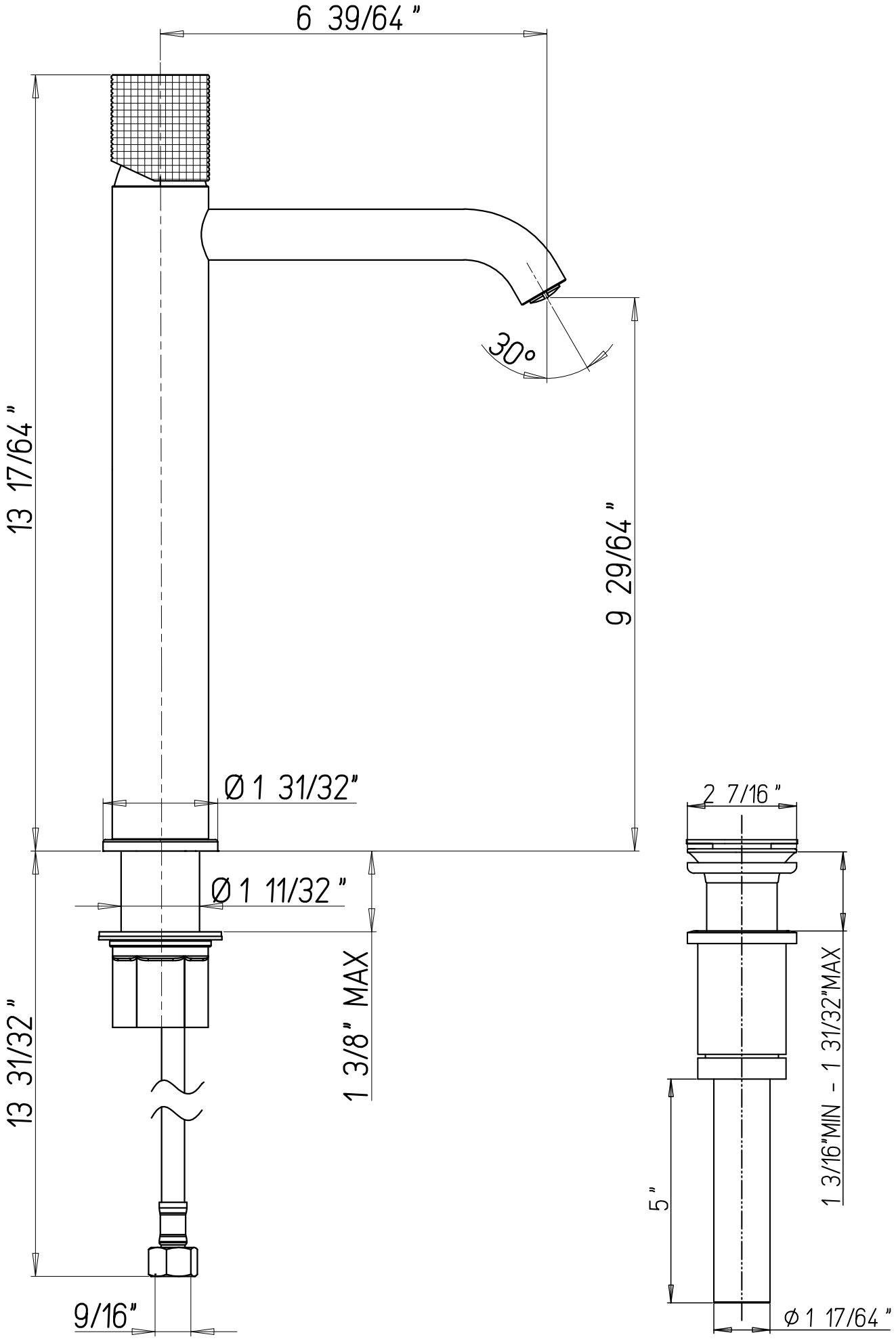
6 39/64 "
30°
13 17/64 "
9 29/64 "
Ø 1 31/32"
Ø 1 11/32 "
1 3/8" MAX
13 31/32 "
9/16"
2 7/16 "
1 3/16"MIN - 1 31/32"MAX
5 "
Ø 1 17/64 "