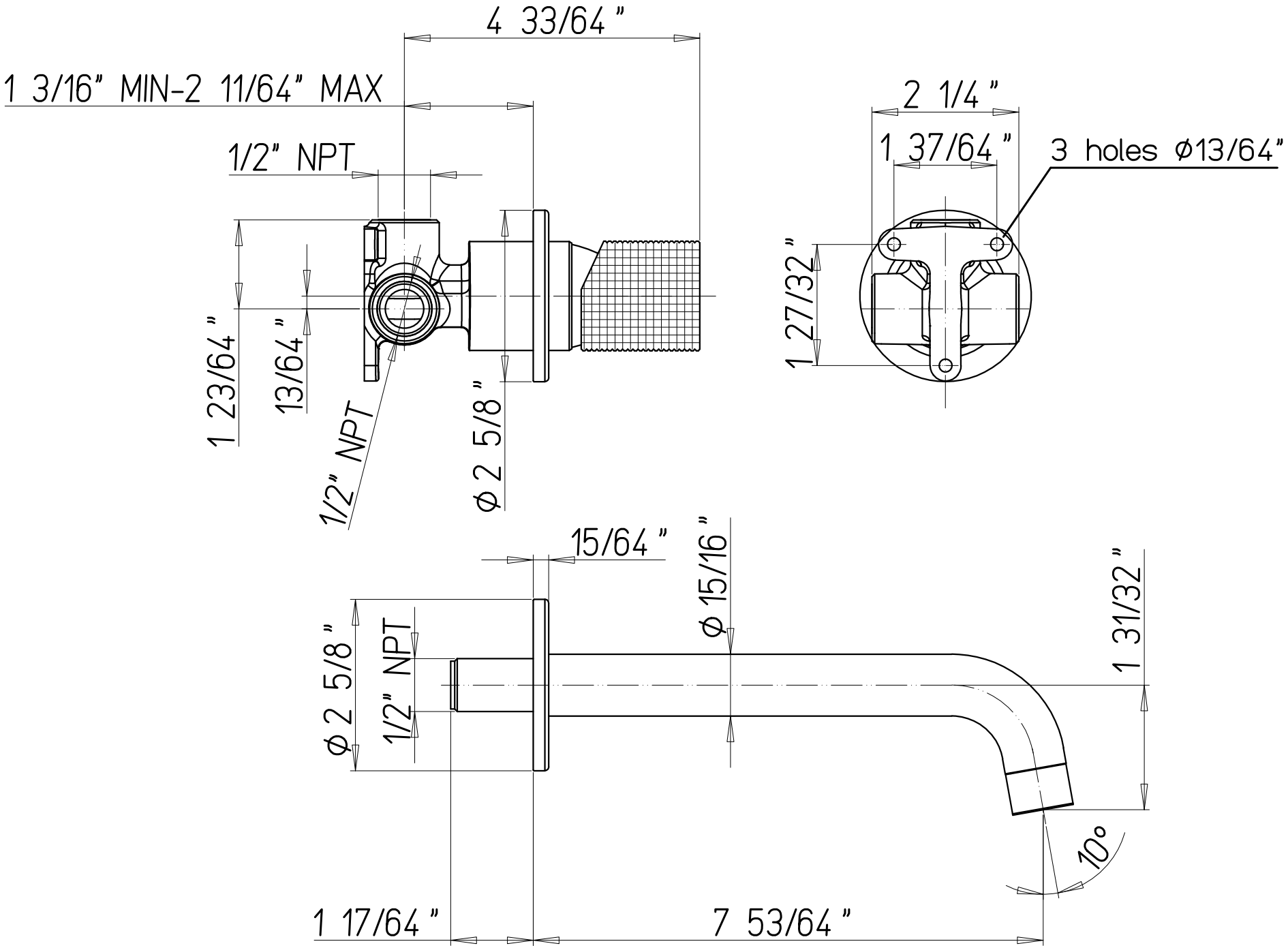
4 33/64 "
1 3/16" MIN-2 11/64" MAX
1/2" NPT
1 23/64 "
13/64 "
1/2" NPT
Φ 2 5/8 "
2 1/4 "
1 37/64 "
3 holes Φ13/64"
1 27/32 "
15/64 "
Φ 15/16 "
Φ 2 5/8 "
1/2" NPT
1 31/32 "
10°
1 17/64 "
7 53/64 "