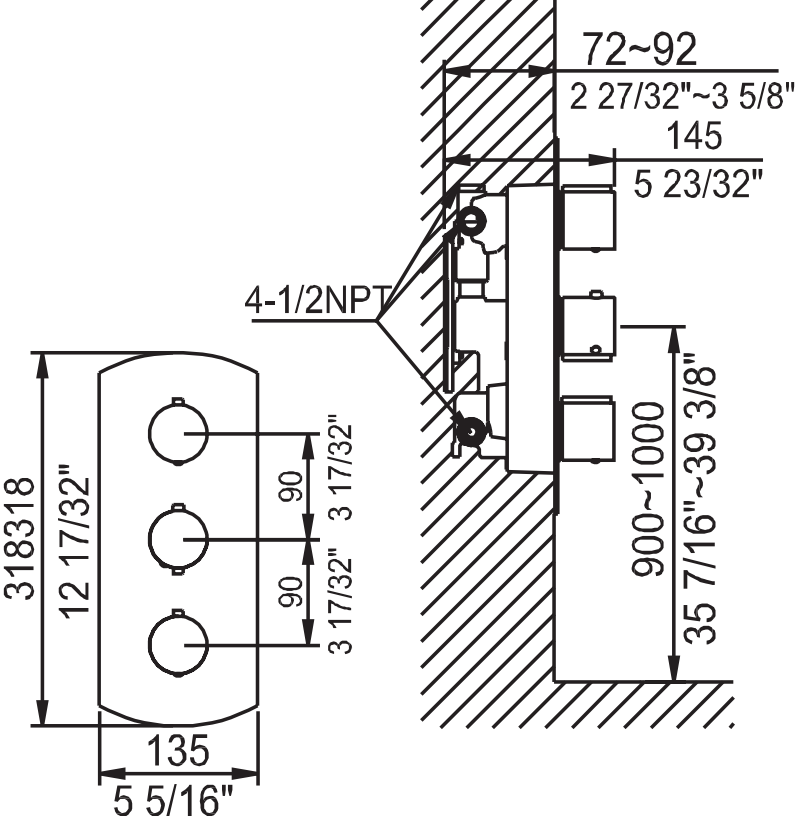
318318
12 17/32"
135
5 5/16"
90
3 17/32"
90
3 17/32"
4-1/2NPT
72~92
2 27/32"~3 5/8"
145
5 23/32"
900~1000
35 7/16"~39 3/8"