Vinnova Alistair Vanity Collection 789036-NO-GW

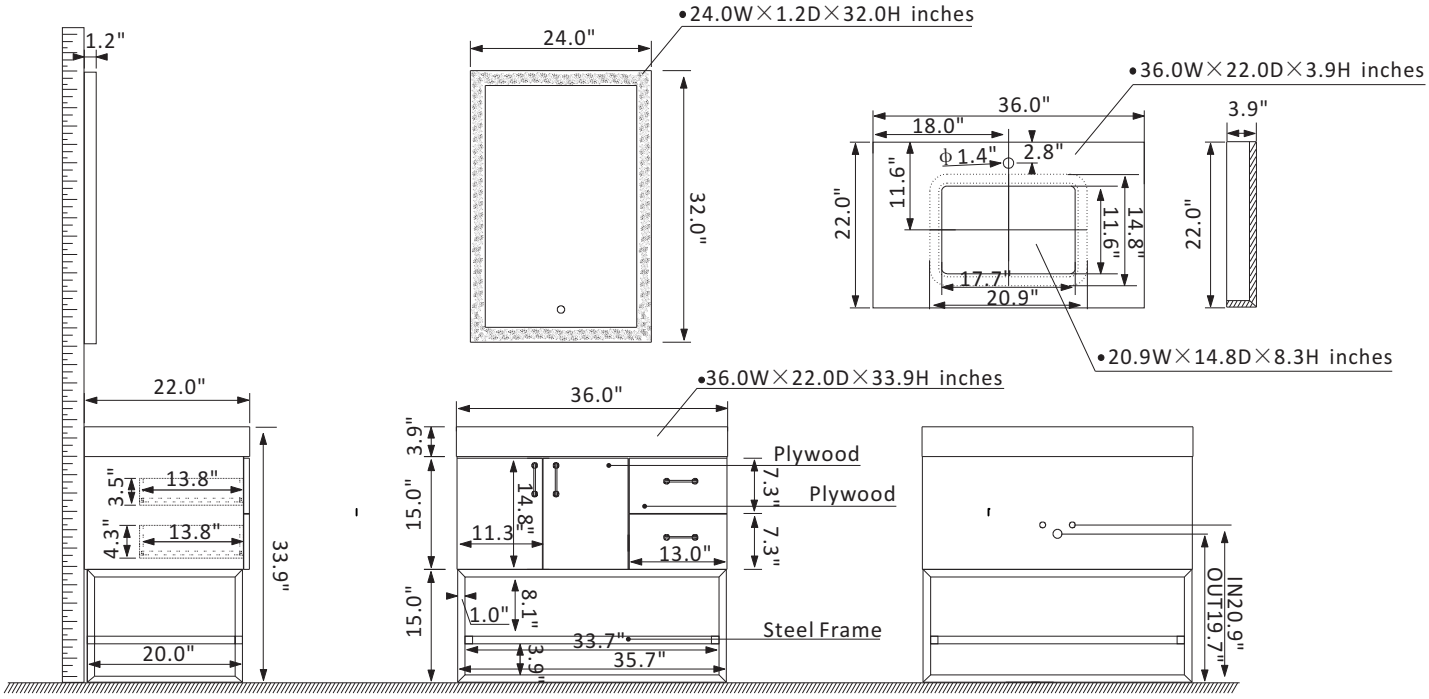

Features

Wood: Solid wood and ply wood construction
North American oak finish
Single rectangle touch-sensor mirror with energy-efficient LED lighting
White grain stone countertop
Rectangular undermount white ceramic sink with overflow included
Two soft-closing drawers & two soft-closing doors
Brushed gold-finish hardware
Brushed gold metal bracket support base and the open type fixed shelf
Built-in UL-listed power and USB outlet
Single faucet hole, pre-drilled
Installation: Easy plumbing and faucet installation*

* Does not include faucet, drain assembly, P-trap or backsplash

VINNOVA
FASHION BATHROOM LIFE