Vinnova Catania Vanity Collection 715036-GR-CA

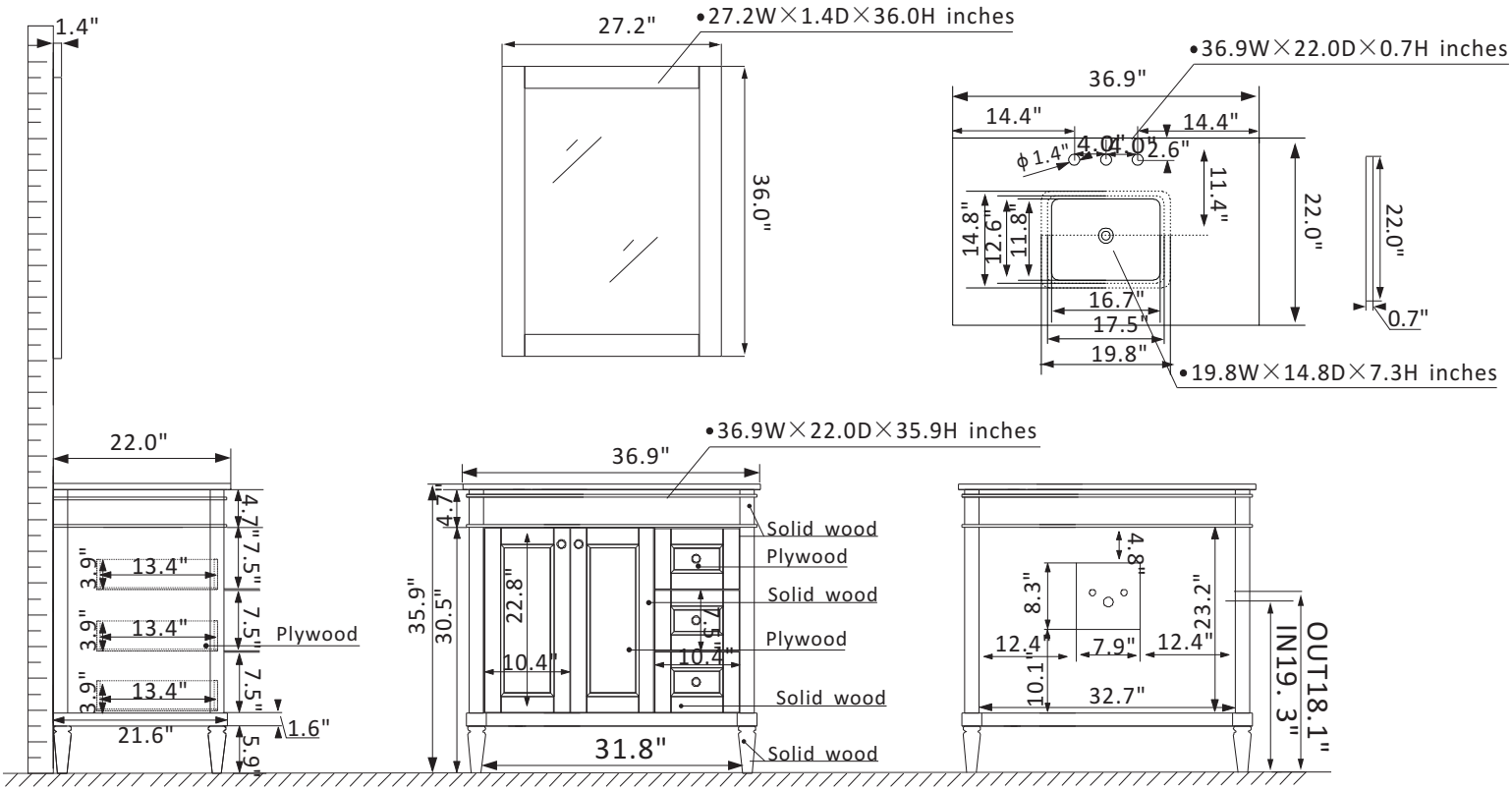

Features

- Adds subtle beauty and refinement to any bathroom
- Sturdy solid-oak/wood veneer construction
- Single Matching Framed Mirror
- Ample space for toiletries
- Available in Espresso,Grey and White finish
- Rectangular Under-Mount Sink
- Alluring brushed-nickel finish hardware
- Three Soft-Closing Drawers and Two soft-closing doors
- Easy plumbing and faucet installation*

* Does not include faucet, drain assembly, backsplash or P-trap

VINNOVA

FASHION BATHROOM LIFE