Signature Royale - SR-6030 - Specification Sheet

Features

- 3D LED Color Temperature Lights with Dimmable touch control
- Mirrored interior with 3 rows of adjustable glass shelves
- Includes Digital Clock
- Includes Defogger with push button
- Includes one USB outlet in the middle door,
  one outlet without USB in right door
- Includes installation hardware for recess mounting
- Can be recessed or surface mounted
  (surface mounting is included)
- Interior Light with sensor switch
- Energy efficient LED lighting:

Kelvin	3000	6500	4500 mixed color
CRI	80+	80+	80+
Lumens*†	360	360	720
R9 Value*	50+	50+	50+
Watts (AC)	150	150	150
Lumens per Watt	90	90	90

- Integrated LED 3X Magnifying Mirror

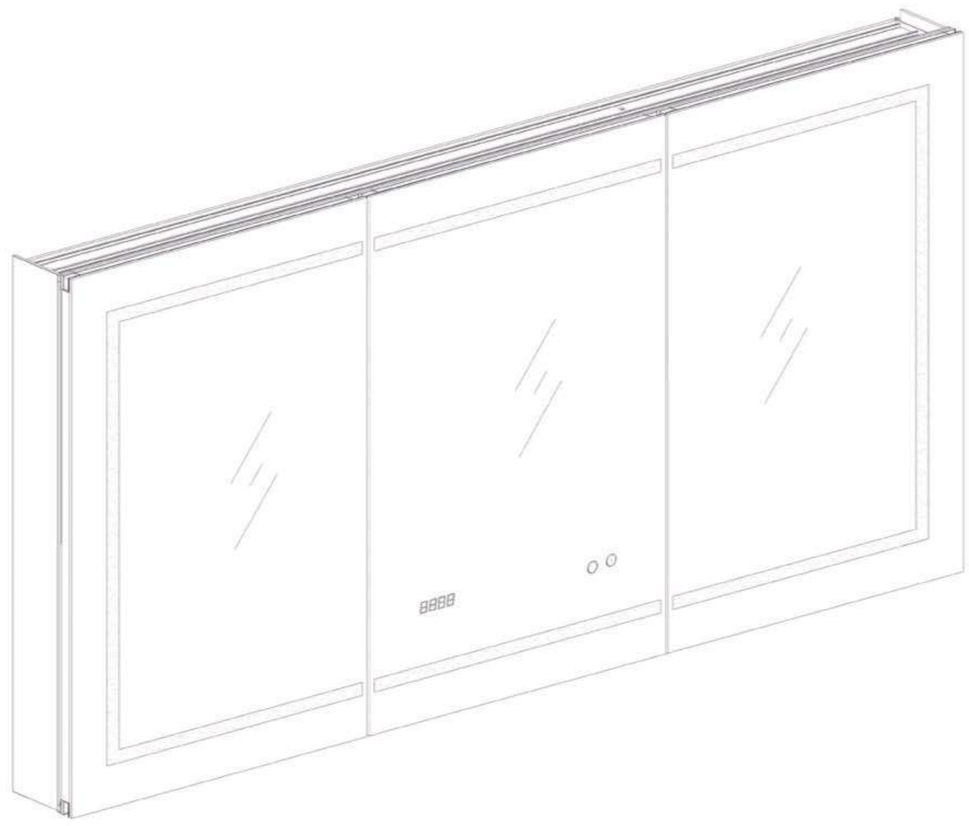

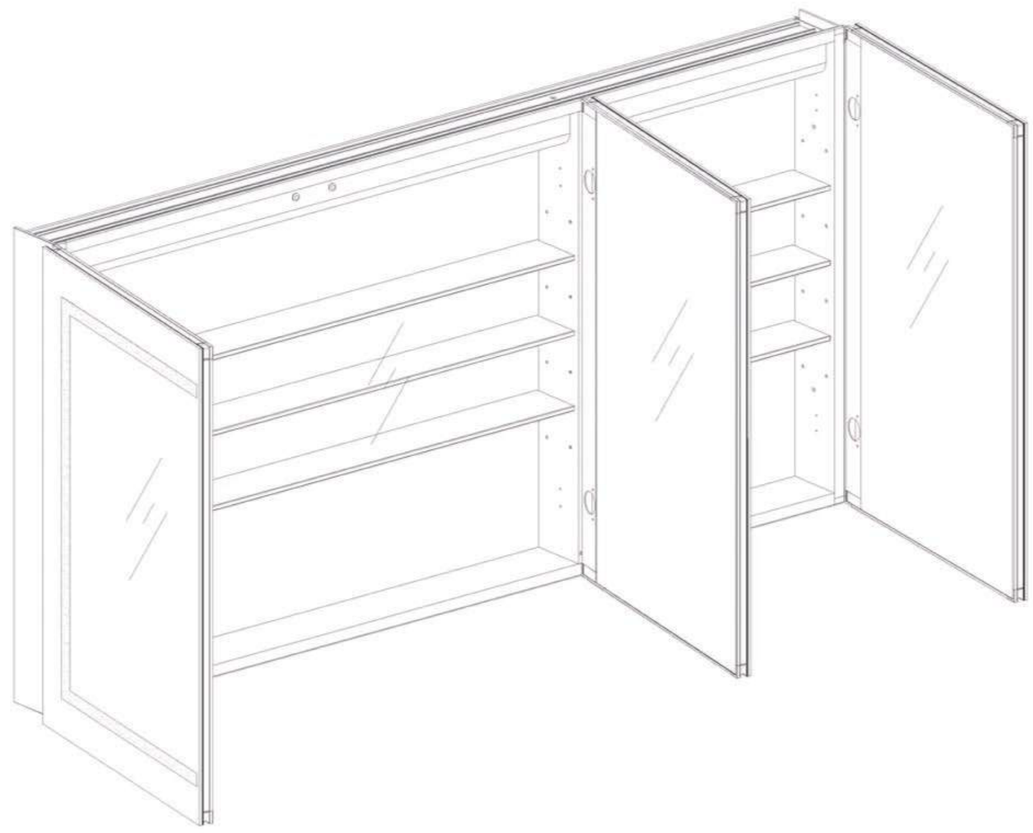

Construction

- Grey aluminum body and door frame
- 3 mirror design – rear of cabinet and both sides of door
- Concealed finger pull-door edge
- 4 DTC 155° self-closing hinges , 2 DTC 90° hinges in the middle
- Adjustable shelving at 2 1/3" (60 mm) increments
- Single field wire into electrical shelf - Front access serviceability

Codes/Standards Applicable

Electric Option Models are ETL certified to:

- UL 962
- CSA Standard C22.2 No. 68

Dimensions

Height: 30" (762 mm)
Width: 60" (1524 mm)
Depth: 5" (127 mm) When surface mounted
1" (25 mm) When recessed

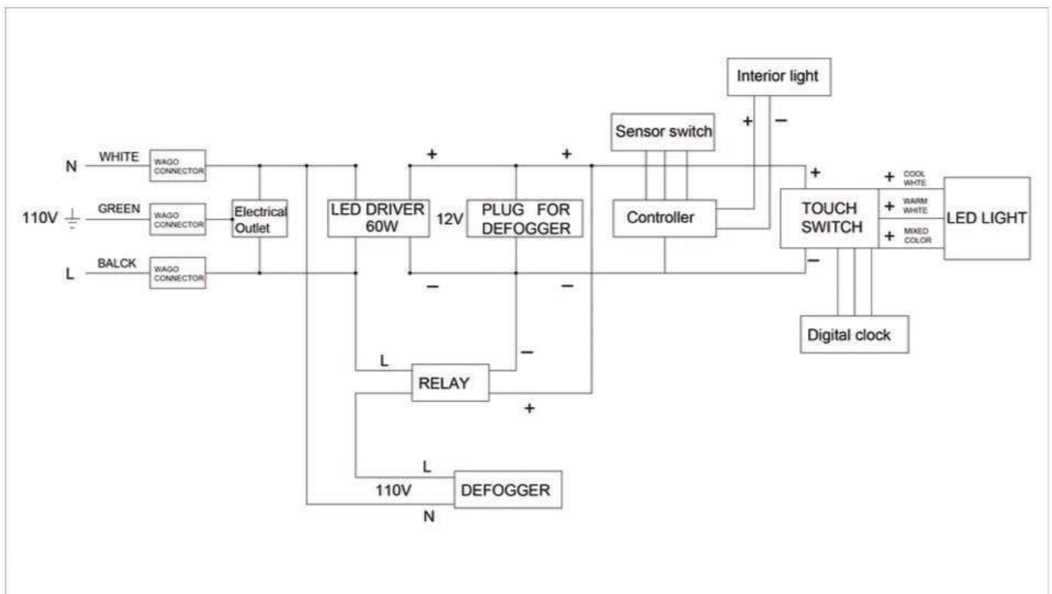

Circuit Diagram

Installation Options

- Recessed Mount - Rough Opening - 29-1/2" H x 59-1/2" W x 4" D (749mm H x 1511mm W x 102mm D)
- Surface Mount - Surface Mount Kit is included

Electrical System

- 150 Watts LED Driver
- INPUT : 100-120V 60HZ 3.0A
- OUTPUT : 12VAC 10A
- Field wire location as shown in drawing
- 1/2" conduit (Ø 7/8" actual) electrical knockout location shown below
- Included field wire cable clamp
- Circuit Diagram (See on page 1)

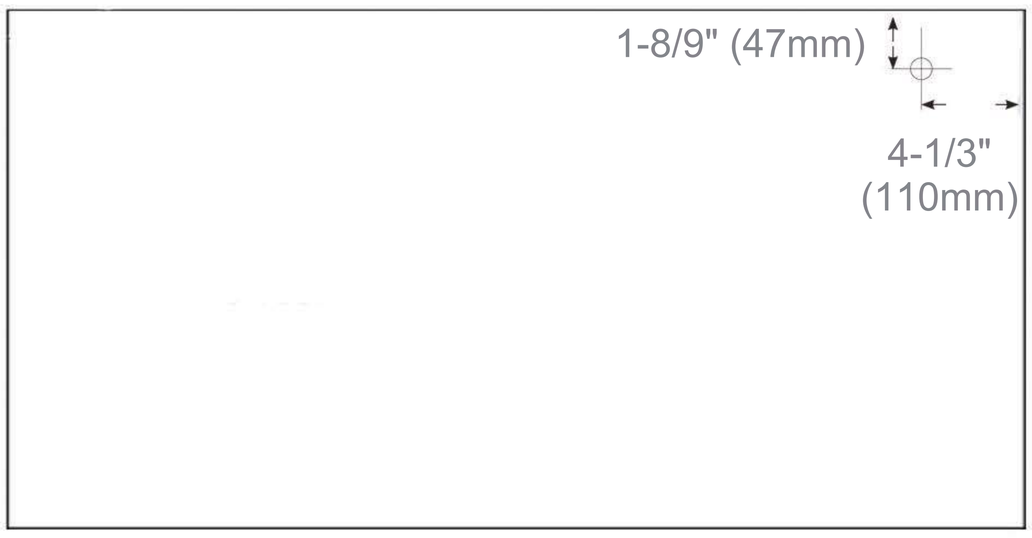

Back of Cabinet - Wire Access Location

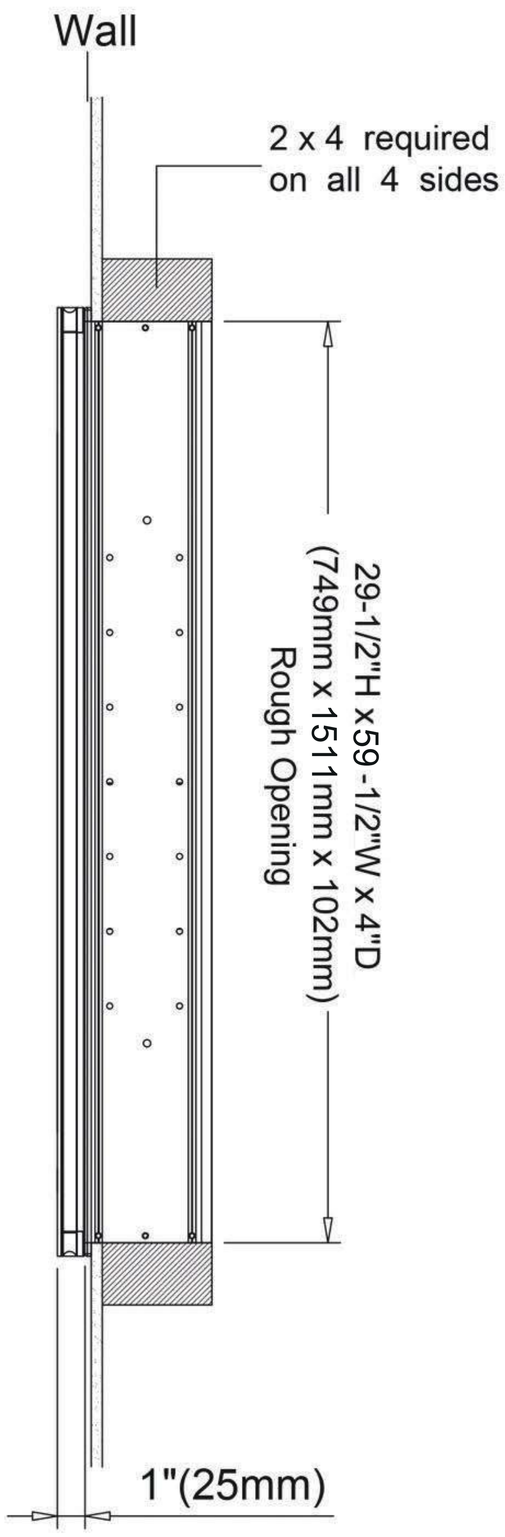

Recessed Mount

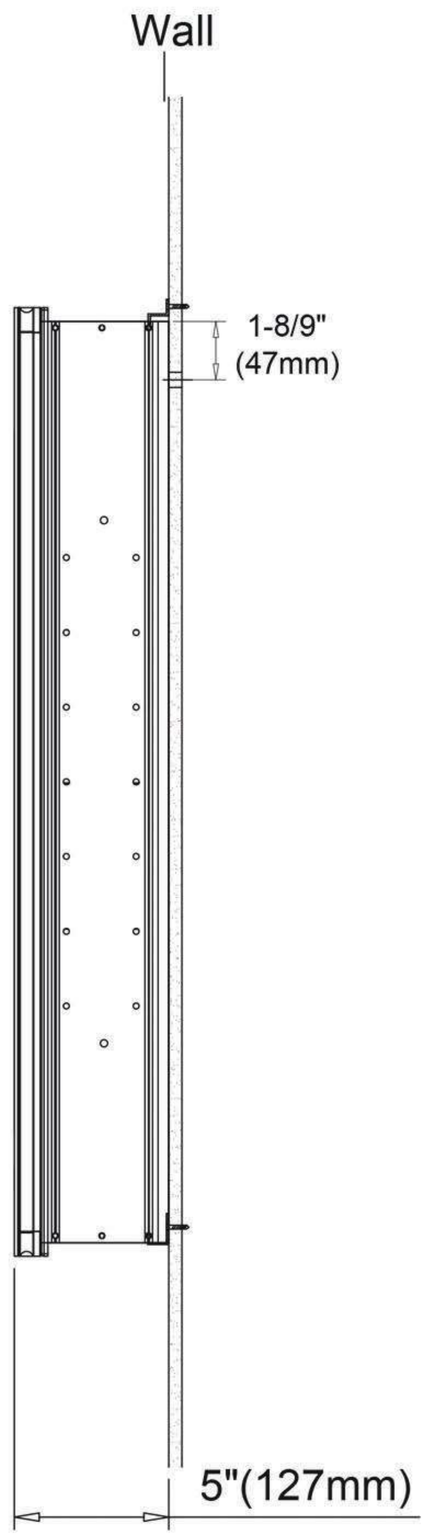

Surface Mount

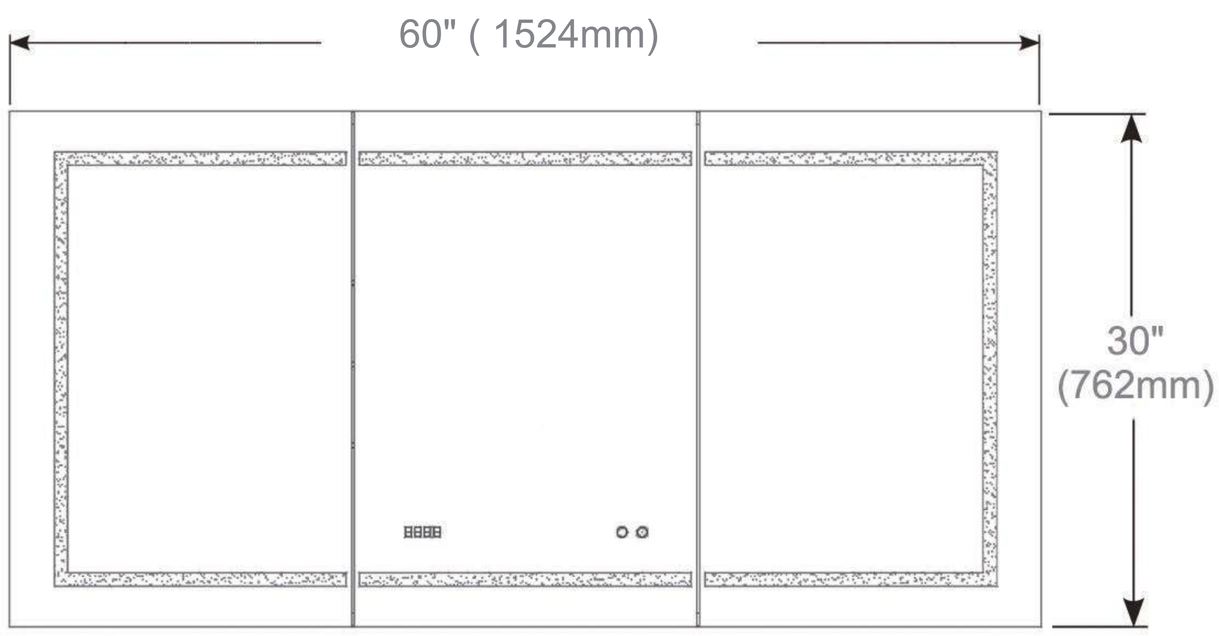

Cabinet Dimensions

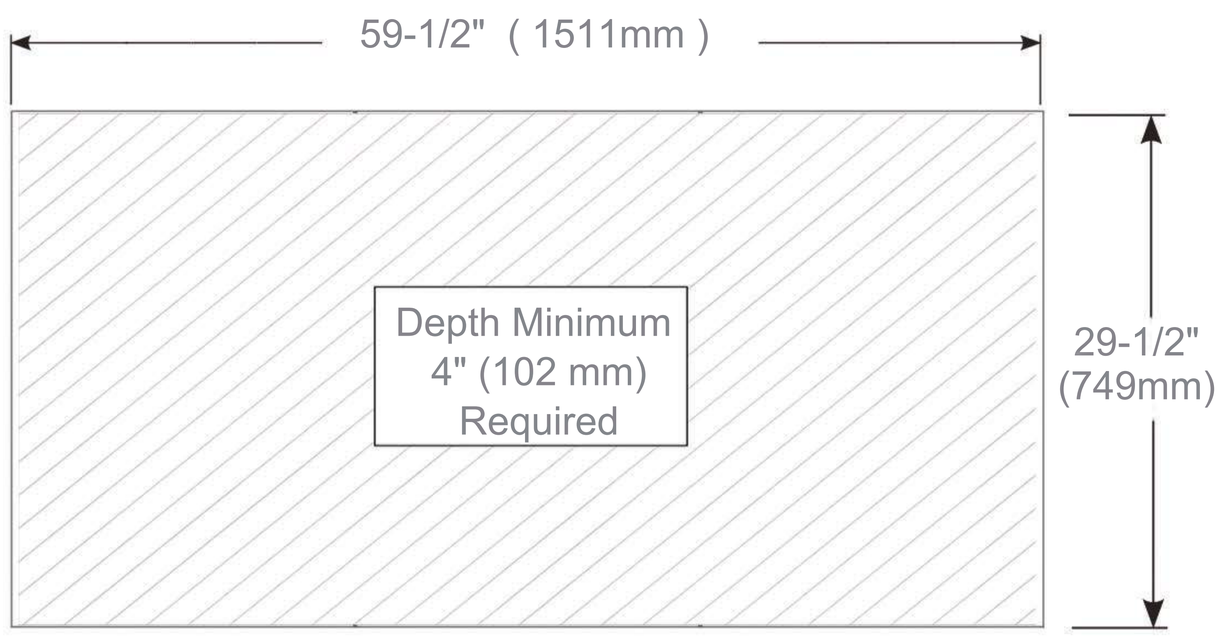

Rough-in Dimensions