Vino Pins Flex

Spec sheet for VP-FLEX1, 9-bottle wine rack system

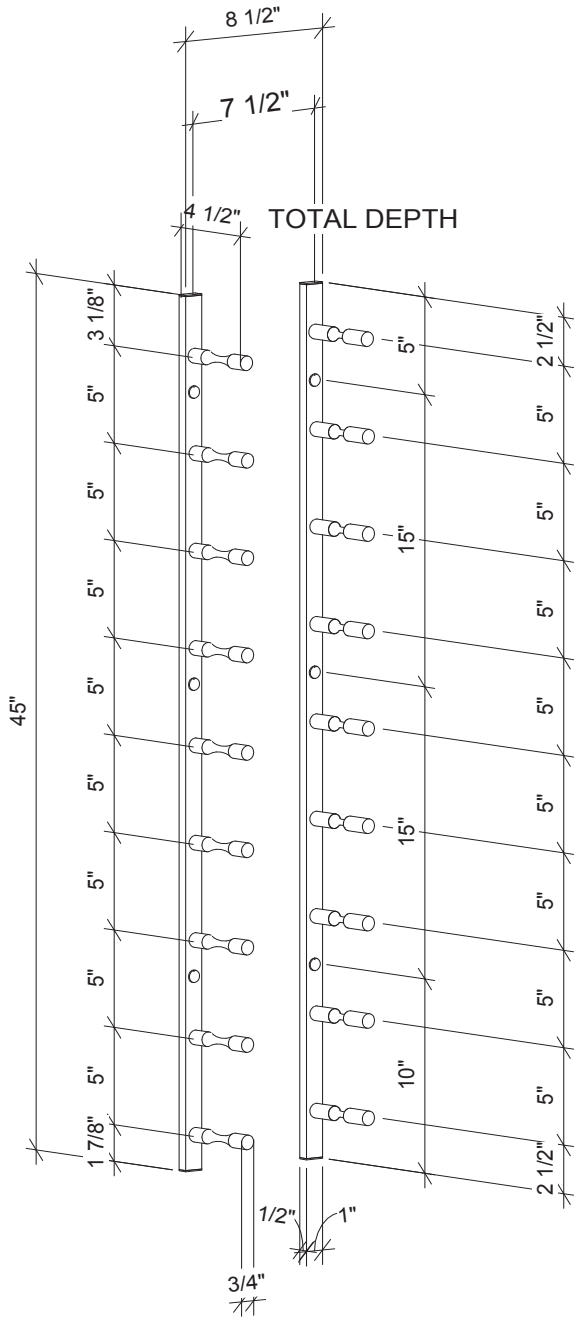

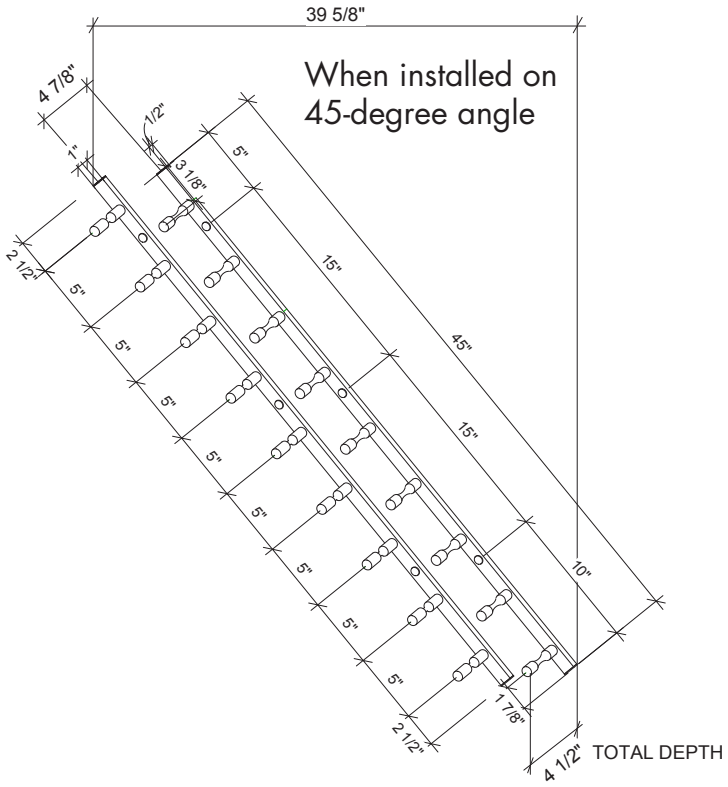

Allow 13″ width
when bottles stored

VINTAGEVIEW®
MOVING WINE STORAGE FORWARD

Vino Pins Flex

Spec sheet for VP-FLEX2, 18-bottle wine rack system

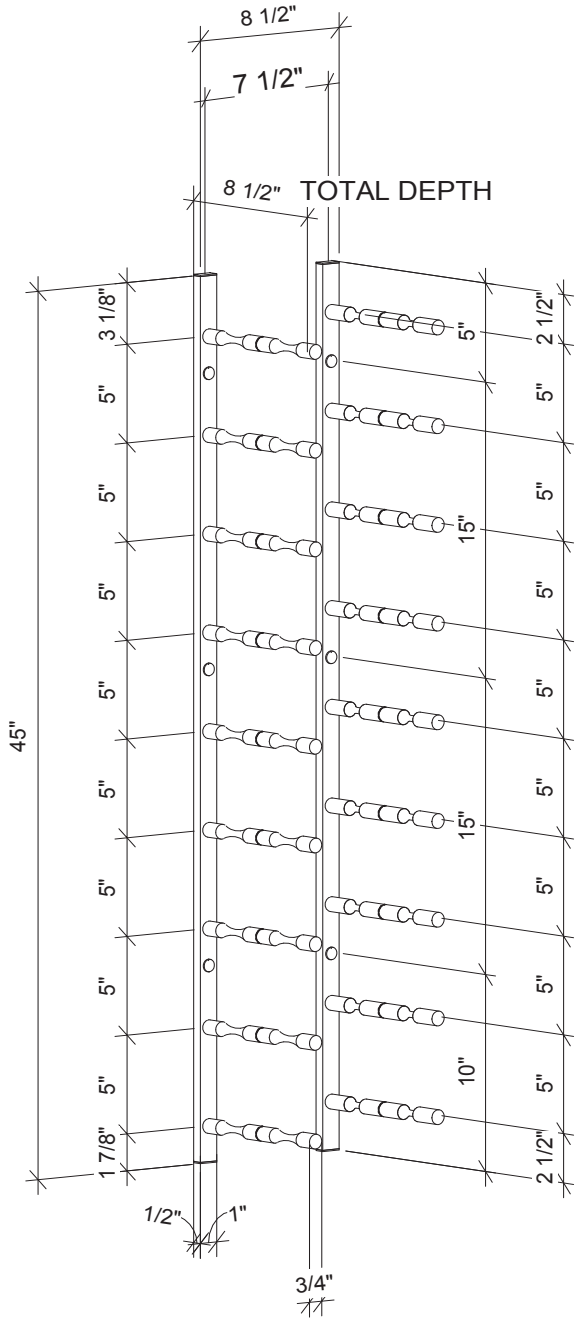

Allow 13″ width when bottles stored

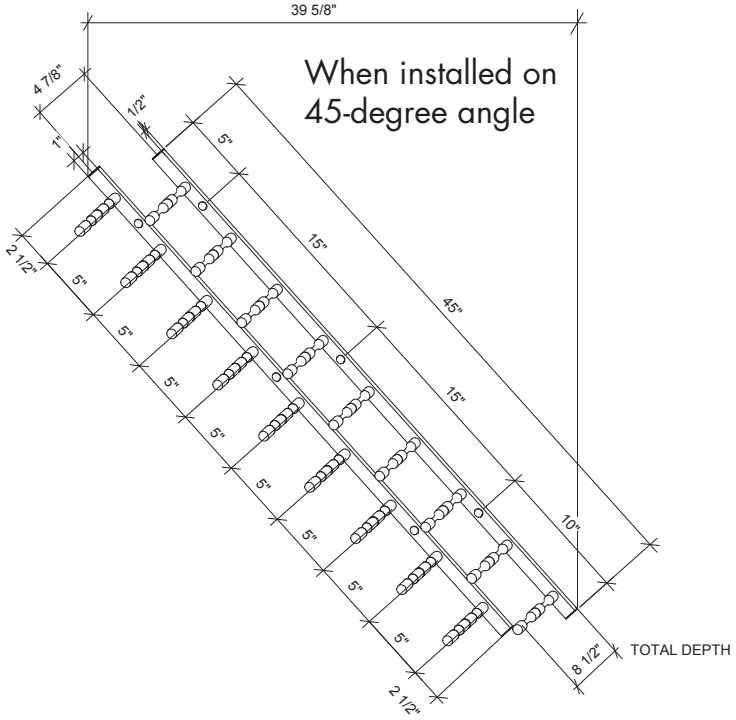

VINTAGEVIEW®

MOVING WINE STORAGE FORWARD

Vino Pins Flex

Spec sheet for VP-FLEX3, 27-bottle wine rack system

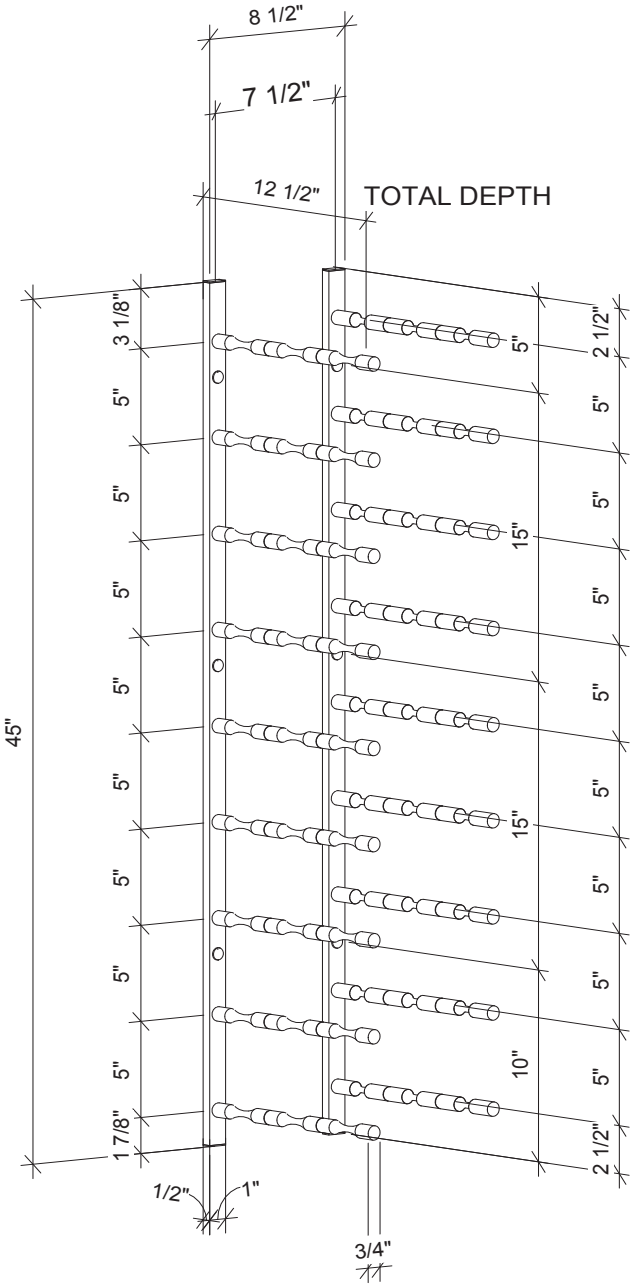

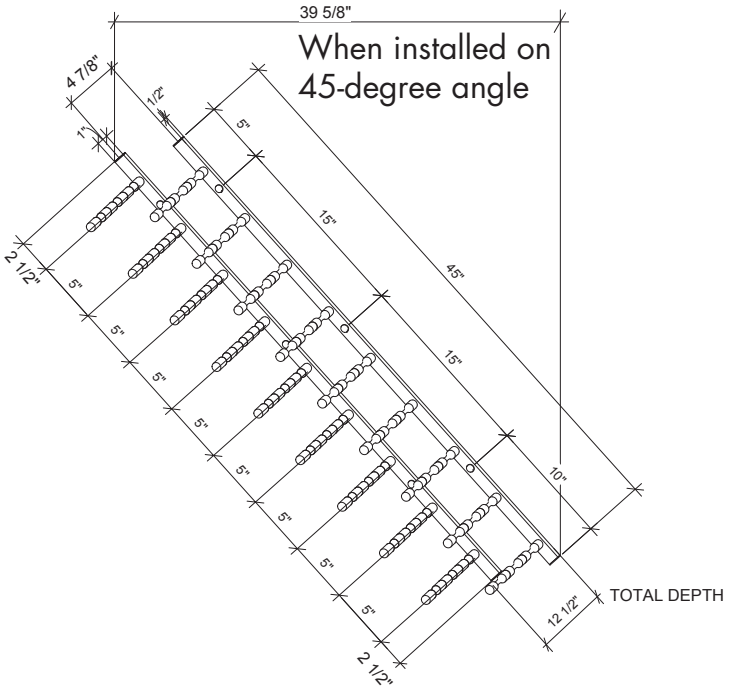

Allow 13″ width
when bottles stored

VINTAGEVIEW®
MOVING WINE STORAGE FORWARD