MANUAL NO. EN9312

ENGINEER'S MANUAL

STYLES

SP151H829M032
SP151H830M032
SP151H829M040
SP151H830M040
SP161S800M032
SP161S800M040
SP161S800M048C
SP161S900M032C
SP161S900M040C
SP161S900M048C
SP161H829M032
SP161H830M032
SP161H829M040
SP161H830M040
SP172S800MAAC
SP172S800MACC
SP172S800MADC
SP172S900MACC
SP172S900MADC
SP172S900MAEC
SP172S800MBDC
SP172S900MBDC
SP172S900HAC
SP172S900HAD
SP172S900HAE
SP172S900HBD
SP172S900HBE

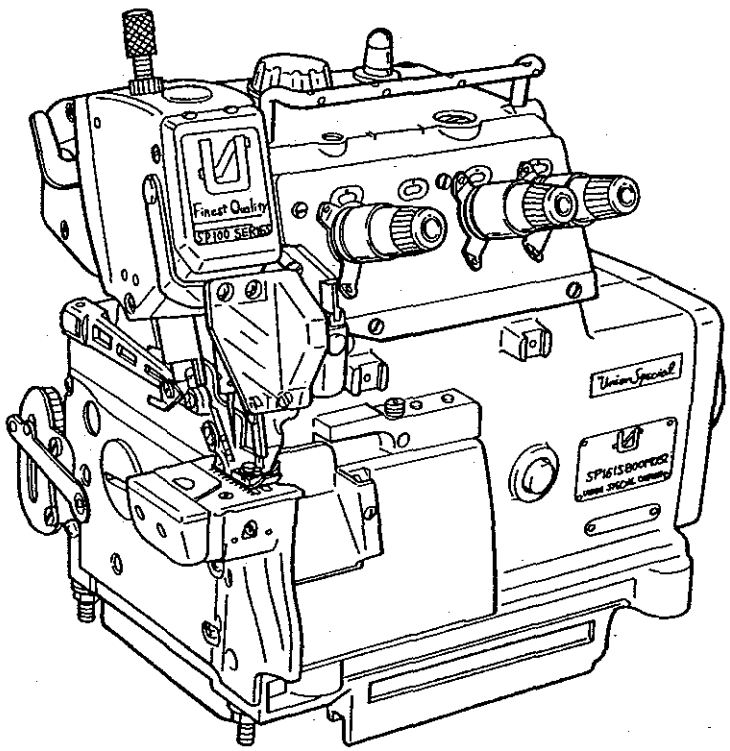

SP100 SERIES
CYLINDERBED OVERLOCK MACHINE

Finest Quality

Union Special
INDUSTRIAL SEWING EQUIPMENT

First Edition

PREFACE

This Engineer's Manual is written for the technical personnel who are responsible for the service and maintenance of the machine. The Instruction Manual for these machines intended for the maintenance personnel and operators at an apparel factory contains operating instructions in detail. And this manual describes "Standard Adjustment", "Adjustment Procedures", "Results of Im proper Adjustment", and other important information which are not covered by the Instruction Manual.
It is advisable to use the relevant Instruction Manual and Parts List together with this Engineer's Manual when carrying out the maintenance of these machines.

CAUTIONS

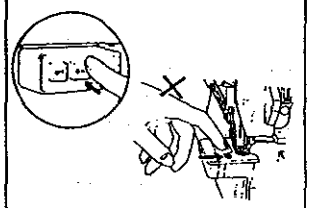

1. Do not put your hand under the needle when you turn on the power switch.

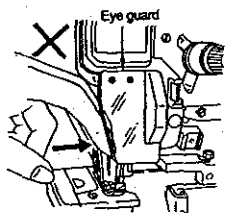

2. Do not put your hand into the face plate section while the machine is running.

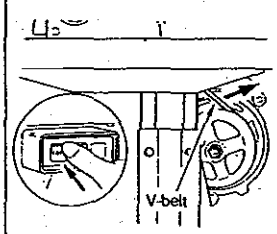

3. Be sure to turn off the power switch before you remove the V-belt.

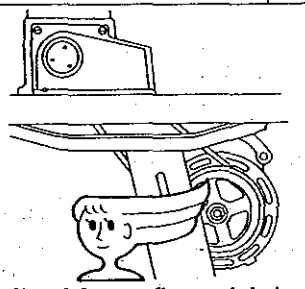

4. Never bring your fingers or hair close to, or place anything on the hand-wheel, V-belt, bobbin winder wheel or motor during operation. It may lead to serious personal injuries.

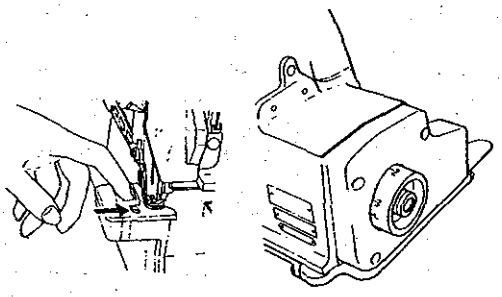

5. If your machine is provided with a belt cover, finger guard and eye guard, never operate your machine with any of them removed.

6. Do not wipe the surface of the machine head with lacquer thinner.

7. If your machine is equipped with a clutch type motor, the motor will be kept running by inertia after turning OFF the power switch.
   It is dangerous to depress the foot pedal of the sewing machine while the motor is still running, because the sewing machine will start rotating abruptly. Be sure to keep the foot pedal of the sewing machine held depressed after turning OFF the power switch until the sewing machine completely stops.
8. When you leave from your machine, make sure to turn OFF the power to it.
9. In case of a power failure, make sure to turn OFF the power to the machine.

BEFORE OPERATION

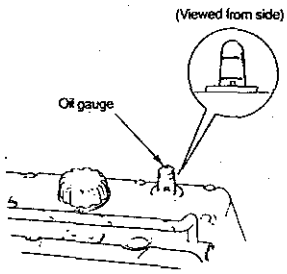

1. If the pointer bar of the oil gauge comes down under the lower marker line when observing the oil gauge from sideward, supply oil referring to the description of "5. *Lubrication*."

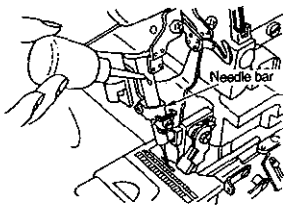

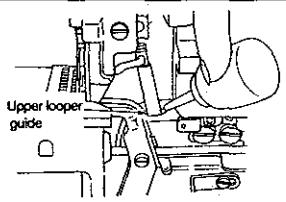

2. Apply two or three drops of oil to the needle bar and upper looper guide when operating the machine for the first time after setup or after a long period of disuse.

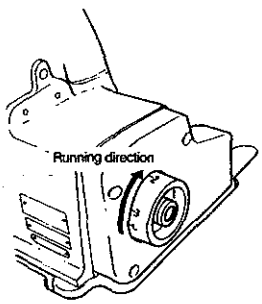

3. The correct machine running direction is such that the handwheel turns clockwise as viewed from the hand-wheel's side. Never run the machine in the reverse direction.

CONTENTS

1. SPECIFICATIONS

SP 100 Series

1	Model	SP151/161 (*: SP151, 161)	SP 172
2	Description	1-needle Overlock machine	2-needle Overlock machine
3	Stitch type F.S.T.	504	514
4	Sewing speed (max.)	8,500 s.p.m.	8,000 s.p.m.
5	Stitch length	0.8 ~ 3.5 mm	
6	Needle gauge (mm)	—	2, 2.4
7	Overedging width (mm)	3.2, 4, 4.8	2, 3.2, 4, 4.8
8	Differential feed ratio	Gathering 1:2.3 (Max. 1:4.5), Stretching 1:0.8	
9	Needle bar stroke	24.3 mm	
10	Needle tilt angle	20°	
11	Needle	DC x 27 (standard)	
12	Presser lifting amount (mm)	5.5 mm	6.0 mm
13	Presser foot pressure	Max. 6 kg	
14	Stitch adjusting method	By pushbutton	
15	Upper knife	Square knife (standard)	
16	Differential feed adjustment	By lever	
17	Weight	28 kg	
18	Lubrication	Gear-type automatic lubrication	
19	Lubricating oil	New Defrix Oil No. 2	
20	Needle cooler	By silicon oil lubricating unit for the needle tip	
21	Needle thread heat remover	By silicon oil lubricating unit for the needle thread	
22	Motor	2P 550 W (for 7,500 s.p.m. or more) 2P 400 W (below 7,500 s.p.m.)	

NUMBERING SYSTEM FOR SP100 MACHINES

SP 1 7 2 S 9 00 M AC C

1/2	
BASIC FRAME	
SP	OVERLOCK STRAIGHT NEEDLE CYL. BED

3	
GENERATION	
1	FIRST GENERATION
2	SECOND GENERATION

4	
STITCH TYPE	
5	502, 503
6	504, 505
7	506, 507, 512, 514, 521

5	
NUMBER OF NEEDLES	
1	1 - NEEDLE
2	2 - NEEDLES.

6	
APPLICATION	
H	HEMMING (EF)
S	SERGING

7	
FEED TYPE	
8	2 ROW DIFF. FEED
9	3 ROW DIFF. FEED

8/9	
ATTACHMENTS / FEATURES	
00	NO ATTACHMENTS
29	ADJUSTABLE HEMMER
30	ADJUSTABLE HEMMER W/SWITCH DEVIATION

10	
SEWING CAPACITY	
M	MEDIUM
H	HIGH

11/12		
NEEDLE GAUGE/OVEREDGE WIDTH		
CODE	MM	INCHES
AA	2.0-2.0	5/64 - 5/64
AC	2.0-3.2	5/64 - 1/8
AD	2.0-4.0	5/64 - 5/32
AE	2.0-4.8	5/64 - 3/16
BD	2.4-4.0	3/32 - 5/32
BE	2.4-4.8	3/32 - 3/16
OVEREDGE WIDTH		
GAUGE	MM	INCHES
032	3.2	1/8"
040	4.0	5/32"
048	4.8	3/16"

13	
SPECIAL MACHINE CODE	
	STANDARD
C	UPPER LOOPER LONGER TRAVEL

UPDATED 3/28/94 L.D. (pete-t.chp)

3. STANDARD ADJUSTMENT (FOR MAIN UNIT)

STANDARD ADJUSTMENT

(1) Adjusting the needle height

When the needle(s) is in the highest position the distance between the needle point(s) and the throat plate surface should be as shown below.

SP	151/161
Refer to right Fig.	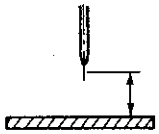
SP	172
Refer to right Fig.	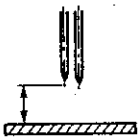

SP161S800
SP161H

Model	Left needle	Right needle
SP151H	10.0(0.394")	—
SP161S△△△△△△△C	10.5(0.413")	—
SP161SM048C	11(0.433")	—
SP172S△△△M△△△	10.5(0.413")	9.1(0.358")
SP172S△△△H△△△	11(0.433")	9.6(0.378")

The adjustment of needle height for the 2-needle overlock machine should be made in reference to the left needle.

(2) Positioning the throat plate

The needle entry point should be such that the distance between the needle slot edge of the throat plate and the needle center.

Overlock side A	1.3(0.051")

(Unit: mm)

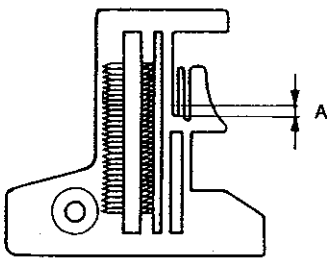

(3) Installing position of the needle clamp

The needle clamp connecting stud should fit with the bottom end of the needle bar or spaced 0.5 mm (0.20") or less from it.

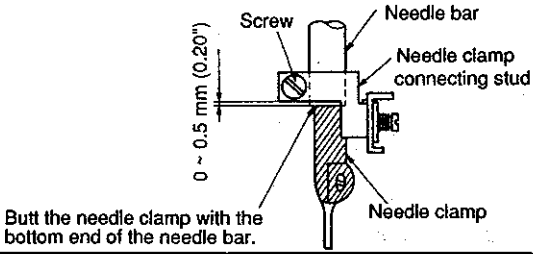

ADJUSTMENT PROCEDURES	RESULTS OF IMPROPER ADJUSTMENT
○ Take off the upper cover, and loosen the set screw of the needle driving forked crank to perform the adjustment of the needle height. 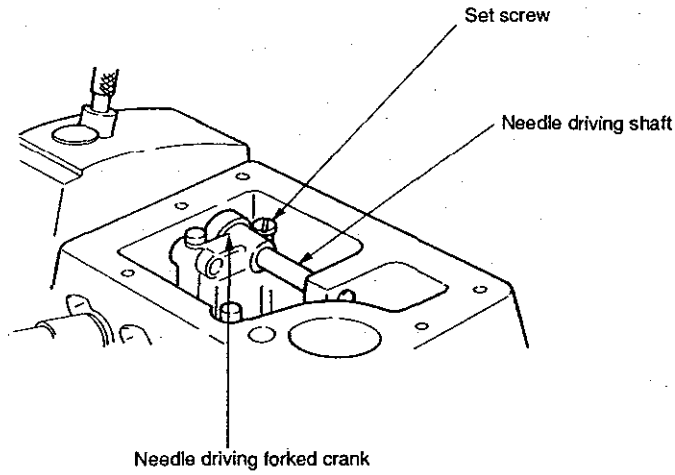 	○ Any other needle height than specified here will badly affect the action of the lower looper, the timing for catching the upper looper thread, etc.
(Caution) Do not fully loosen the set screw of the needle driving forked crank. If the needle driving forked crank has got out of position laterally when its set screw was loosened, fully loosen the set screw and turn pulley to allow the forked crank to turn until it settles by itself. Then tighten the set screw to fix the forked crank at that position.	○ Improper lateral position of the needle driving forked crank will cause seizure, play, or other troubles.
○ Loosen the set screws of the throat plate base to make the adjustment. 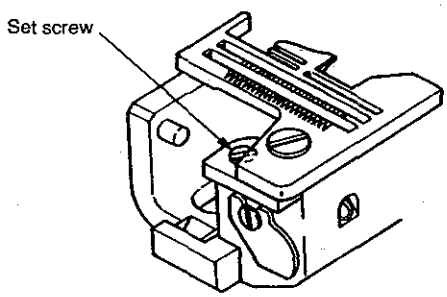 	○ Improperly positioned throat plate will cause needle breakage, contact of the needles with the throat plate, or other troubles.
○ Loosen the screw and adjust, by slightly turning the needle clamp, the clearance provided between the right-hand side needle and the lower looper (for 2-needle overlock machine).	○ If the clearance provided between the needle and the looper is excessive, the needle thread will be likely to skip at the time of tucking. ○ If the clearance provided between the needle and the looper is insufficient, the needle will break or the looper blade point will be damaged causing thread breakage.

(4) Adjusting the lower looper

1) Looper gauge of the lower looper

The distance between the blade point of the lower looper and the center of the needle should be as follows when the lower looper is at the extreme left of its stroke.

Model		Looper gauge of the lower looler
1-needle overlock machine	SP151 SP161H SP161S	4.0±0.3 (0.157±0.012")
	SP161S800M048C SP161S900M032C SP161S900M040C	3.6±0.3 (0.142±0.012")
2-needle overlock machine	SP172S△△M△△	3.6±0.3 (0.142±0.012")
	SP172S△△△H△△	4±0.3 (0.157±0.012")

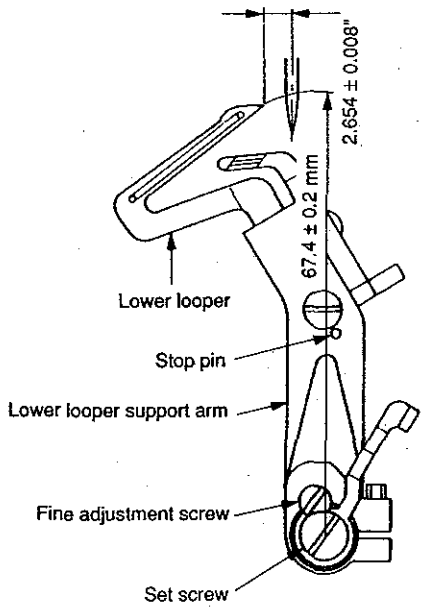

2) Clearance between the lower looper and the needle

The clearance should be 0 to 0.1 mm. (.004")

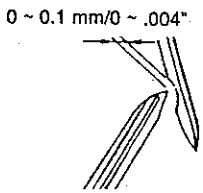

ADJUSTMENT PROCEDURES	RESULTS OF IMPROPER ADJUSTMENT
○ Loosen the set screw of the lower looper support arm to make adjustment of the returning amount of the lower looper. **(Referential information) 1. The radius of the lower looper will be 67.4 mm (2.654±.008") when the lower looper is inserted into the support arm until it contacts the stop pin and then fixed.** **2. The rocking angle of the lower looper will be 27°.**	○ Excessive return of the lower looper tends to cause stitch skipping when filament thread is used. ○ Insufficient return of the lower looper tends to cause needle thread stitch skipping when mixed yarn is used.
○ Loosen the screw in the lower looper supporting arm until it is temporarily tightened. Then, finely adjust the longitudinal position of the looper using the fine adjustment screw. (Turn the fine-adjusting screw clockwise to move the lower looper closer to the needle. Turn it counterclockwise to move the lower looper away from the needle.)	○ Excessive clearance will often cause needle thread stitch skipping. ○ Insufficient clearance will cause needle breakage due to the contact of the looper with the needle, or produce scratches on the blade point of the looper, leading to needle thread breakage or other troubles.

(5) Position of the upper looper guide

Vertical position: To be in close contact with the frame guide surface.
Lateral position: To be pressed against the upper looper guide support gauge.

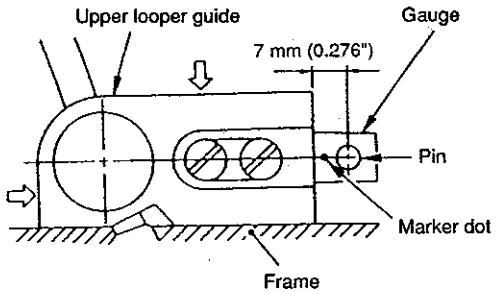

Upper looper guide support gauge	7(0.276") 5.5 (0.217") 6 (0.236")	5(0.217") 6.5 (0.256")
	11831807	11893609

	Model	Position of guide support
1-needle overlock machine	SP-151 SP-161H SP-161S	7(0.276")
	SP161S900M048C	6.5(0.256")
2-needle overlock machine	SP172S△△M△△△	7(0.276")
	SP172S△△H△△△	6.5 (0.256")

(6) Positioning the upper looper holder

The distance between the bottom surface of the frame and the upper end of the upper looper holder pin should be as shown below when the upper looper holder is at the highest point of its stroke.

Model	Dimension (E)
SP151/161	44.85±0.05 mm (1.766"±0.002")
SP172	47.15±0.05 mm (1.856"±0.002")

For models other than standard models

Model	Dimension (E)
SP151 SP161H SP161S	44.85±0.05 (1.766"±0.002")
SP161S800M048C SP161S900M032C SP161S900M040C	47.15±0.05 (1.856"±0.002")
SP172S△△△M△△△	47.15±0.05 (1.856"±0.002")
SP172S△△△H△△△	48.15±0.05 (1.766"±0.002")

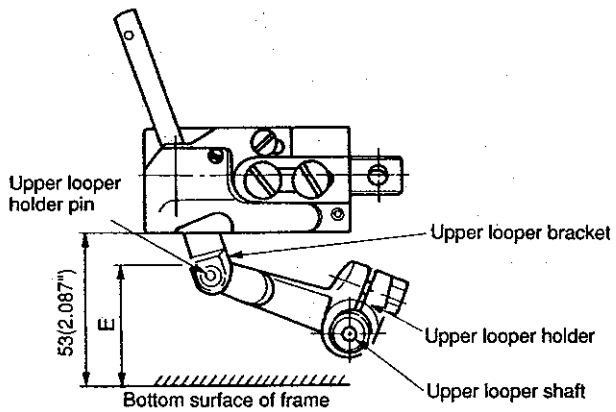

ADJUSTMENT PROCEDURES	RESULTS OF IMPROPER ADJUSTMENT
○ Fit the upper looper guide supporting gauge over the gauge fixing pin which has been driven in the frame and secure the gauge with an O ring. Then position the gauge taking the marker dot engraved on it or the chamfering direction as reference. ○ When installing the upper looper guide, press it against the gauge while keeping the upper looper guide into close contact with the frame surface, then tighten the screws.	○ If the upper looper guide has improperly positioned vertically, it will cause oil leakage or disturbed path of the upper looper with resultant stitch skipping. ○ If the upper looper guide has been inaccurately positioned laterally, it will cause stitch skipping, or contact with the looper.
<Adjustment order> 1) Loosen the setscrew of the upper looper ball arm. 2) Determine the dimension from the bottom of the frame to the upper looper arm pin, then tighten the screw in the upper looper ball arm. **(Caution) If the screw in the upper looper arm has been loosened to replace the upper looper connection, tighten the screw in the upper looper arm at the position where the upper looper arm smoothly moves when it is moved slightly beyond the momentum of the upper looper connection with the upper looper ball arm loosened. (Confirm that the upper looper smoothly moves together with the shaft.)** Upper looper ball arm 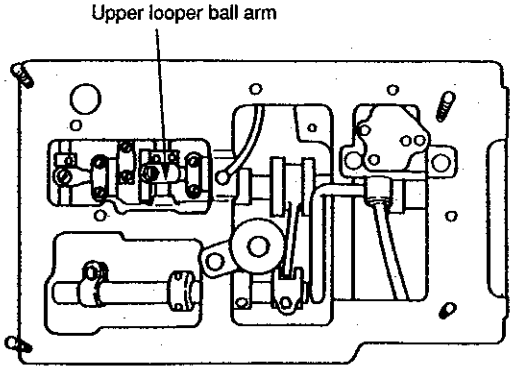	○ Inaccurately positioned upper looper holder will cause excessive projection of the upper looper, resulting in stitch skipping, or other troubles. ○ If the upper looper ball arm has been improperly positioned longitudinally, seizure will result (mainly because the arm sticks when it goes up). **(Caution) To adjust the upper looper ball arm, take dimension E as standard. Remember that the projecting amount and the height of the upper looper should eventually be properly adjusted. So, confirm the dimensions related to the upper looper.**

(7) Positioning the upper looper

1) Height of the upper looper

The distance between the throat plate surface and the blade point of the looper should be as follows when the upper looper is at the extreme left of its travel.

① SP100 Standard

SP151H	10.7±0.3 mm	(0.421"±0.012")
SP161H	10.7±0.3 mm	(0.421"±0.012")
SP161S	10.7±0.3 mm	(0.421"±0.012")
SP172	10.9±0.3 mm	(0.429"±0.012")

For models other than standard models

Model	Dimension Ⓐ
SP151H SP161H SP161S	10.7±0.3 mm (0.421"±0.012")
SP161S800M048C SP161S900M032C SP161S900M040C SP172S△△△M△△△△	10.9±0.3 mm (0.429"±0.012")
SP161S900M048C	11.0±0.3 mm (0.433"±0.012")
SP172S△△△H△△△	

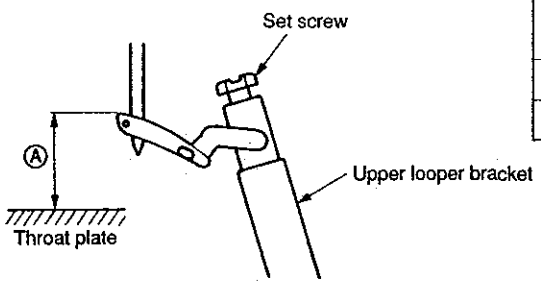

2) Longitudinal position of the upper looper

① The clearance between the upper and lower loopers should be 0.1 (0.004") to 0.2 mm (0.008") when they cross with each other.

② The clearance between the upper looper and the needle should be 0 to 0.2 mm. (0.008")

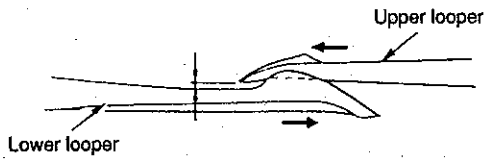

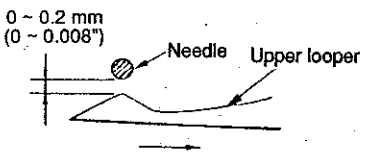

ADJUSTMENT PROCEDURES	RESULTS OF IMPROPER ADJUSTMENT
o Set a hexagon wrench onto the set screw at the end of the upper looper bracket to adjust the height of the upper looper. When adjusting the height, pay attention also to the clearance produced between the upper looper and lower looper at the time of their crossing.	o If the upper looper has been positioned too high, an excessive clearance will be produced between the upper looper and the needle. As the result, the upper looper thread will fail to catch the needle thread, and stitch skipping occur. o On the contrary, if the upper looper has been positioned too low, the needle point will hit the looper, causing needle breakage. Also the looper will touch other component when the presser foot goes up.
o Loosen the set screw at the top end of the upper looper bracket to move the looper back or forth for positioning. 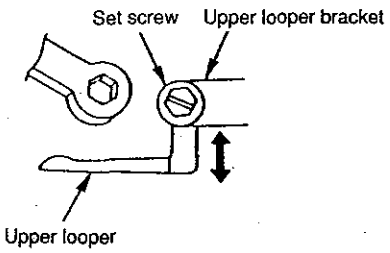 	o Excessive clearance will cause stitch skipping. o Insufficient clearance will cause the upper looper to come in contact with the lower looper.

(8) Positioning the needle guard

1) For 1-needle or 2-needle overlock machine

The overlock machine has two needle guards, Ⓐ and Ⓑ.

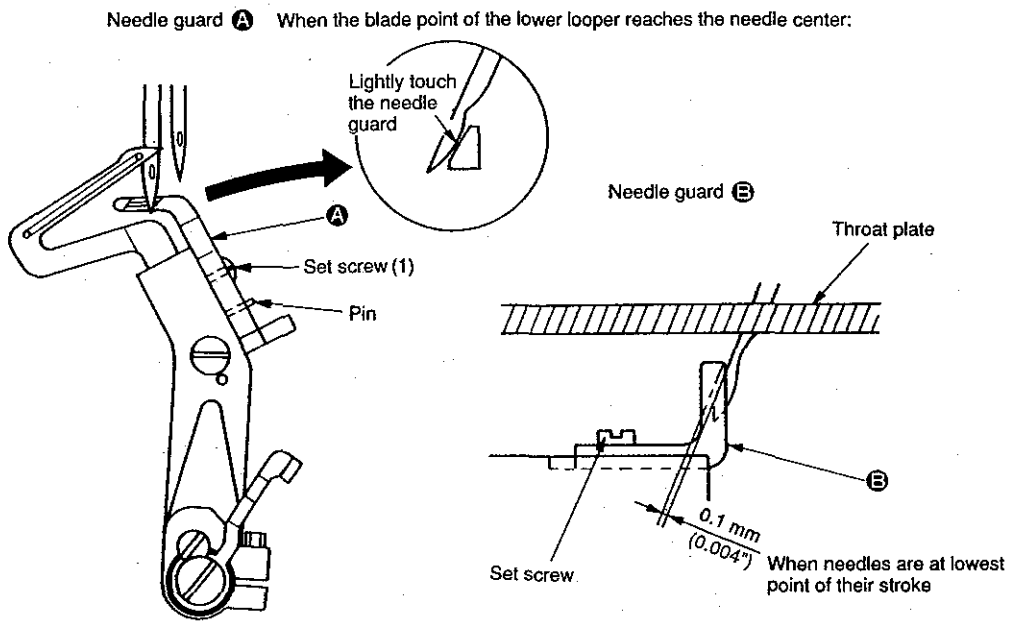

(9) Adjusting the height of the feed dog

The height of the feed dog should be as follows when it is at its highest position.

Model	Height of the feed dog
SP100	1 mm (0.039")

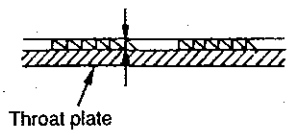

The auxiliary feed dog is 0.5 mm (0.020") lower than the main feed dog.

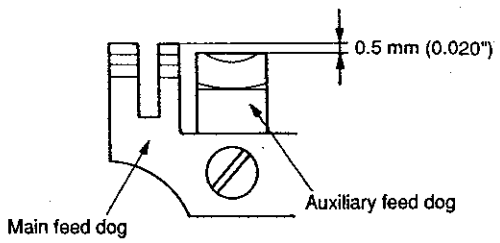

ADJUSTMENT PROCEDURES	RESULTS OF IMPROPER ADJUSTMENT
○ Adjust the clearance between the needle guard Ⓐ and the needles by the set screws of the needle guard. ○ Loosen the screw and adjust the clearance provided between needle guard Ⓑ and the needle by moving the needle guard back or forth.	○ Excessively close contact between the needle guard Ⓐ and the needles will lead to needle bend or stitch skipping. ○ A clearance left between the needle guard Ⓐ and the needles will cause the looper blade point to come in contact with the needles, leading to needle or blade point breakage, or other troubles. ○ Excessive clearance between the needle guard Ⓑ and the needle will cause stitch skipping due to needle shake. On the contrary, insufficient clearance will cause the needle guards to catch the needles between them, leading to wear on the needle guards and scratches on the needles.
○ Perform adjustment by the set screws. 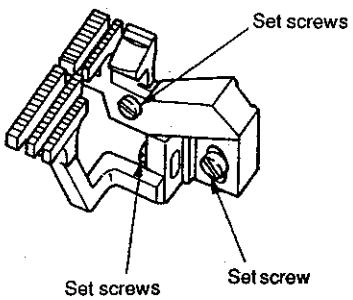 	○ If the feed dogs are too high, the needles will be deflected and broken when sewing heavy-weight materials. The feed dogs will tend to suffer scratches when sewing light-weight materials. Puckering will frequently occur. ○ If the feed dogs are too low, insufficient feed power will result. ○ If the auxiliary feed dog is too high, chain-off thread will be often jammed. ○ If the main feed dog and differential feed dog are set at different heights, proper differential feeding action will be hindered.

(10) Adjusting the tilt of the feed dog

When the feed dogs have come up most, they should be flat.

SP151 SP161 SP172	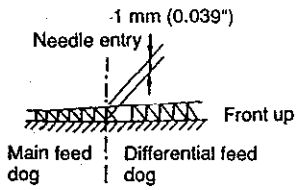

When the feed dog juts out the top surface of the throat plate.

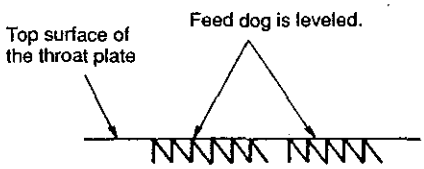

Adjust the inclination of the feed dog when it is in its highest position so that the feed dog is flush with the throat plate when the feed dog juts out the throat plate.

(11) Changing the differential feed ratio

Differential feed ratio is normally changed by the differential feed adjusting lever. If a larger differential feed ratio is required for sewing, change the position of the main feed pin.

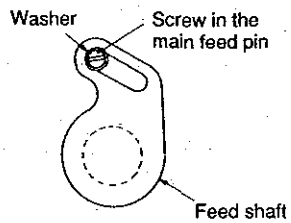	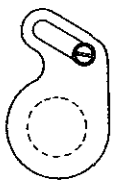
(Standard position) The pin should be positioned at the highest position in the slot.	The pin is positioned at the lowest position in the slot.
(Standard) Gathering: 1 : 2.3 Stretching: 1 : 0.8	(Max. gathering) Gathering: 1 : 4.5 Stretching: 1 : 1.4

ADJUSTMENT PROCEDURES	RESULTS OF IMPROPER ADJUSTMENT
○ The feed bar shaft consists of an eccentric shaft. Loosen the set screw to perform adjustment. Remove the flange rubber cap from the rear of the machine, and loosen the screw. Remove the flange rubber cap and turn the feed bar shaft. When the slit on the shaft is leveled and the marker dot on it is positioned this side (toward the operator)..... The feed dog is leveled. When the marker dot is raised above the standard position..... The feed dog is positioned with this side, toward the operator, raised (in the direction of the arrow). When the marker dot is lowered under the standard position..... The feed dog is positioned with this side, toward the operator, lowered. 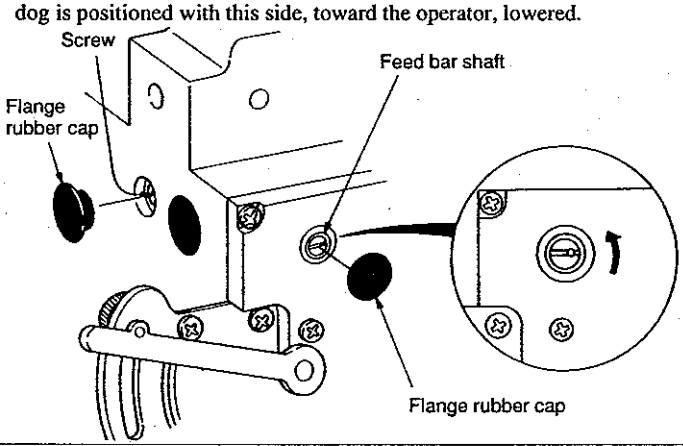 	○ When tilted with the front up Good material catching will be obtained. ○ When tilted with the front down Uneven feed and puckering will be effectively prevented.
○ Remove the cap from the feed adjusting hole located on the left-hand side face of the frame. Then, loosen the screw in the main feed pin and adjust the position of the main feed pin. When the pin is set at its highest position..... Standard When the pin is set at its lowest position..... Max. gathering is obtained. 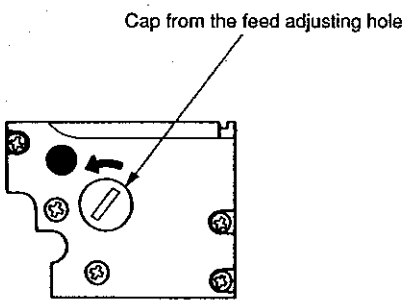 	

(12) Longitudinal position of the feed bar

When the feed pitch is maximized and the differential feed ratio is also maximized, the front and rear ends of the feed dog should be spaced approximately 0.5 mm away from the corresponding edges of the slot in the throat plate.

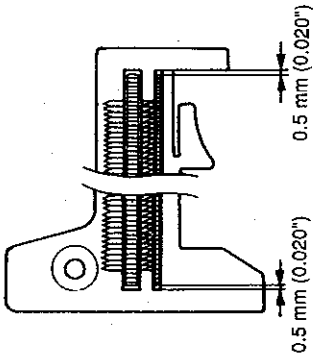

ADJUSTMENT PROCEDURES	RESULTS OF IMPROPER ADJUSTMENT
○ Remove the oil reservoir. Loosen the clamping screws in the feed connection crank and differential feed arm and adjust the feed bars. 1) To adjust only the differential feed bar, loosen the differential feed arm clamping screw. Then perform the adjustment. 2) To adjust only the main feed bar, loosen the feed connection crank clamping screw. Then perform the adjustment. When the main feed bar is adjusted, the differential feed bar also moves out of position. So, after you have adjusted the main feed bar, loosen the clamping screw in the differential feed bar and properly adjust the position of the differential feed bar. 3) To adjust both the main feed bar and the differential feed bar, adjust first the main feed bar, then adjust the differential feed bar. 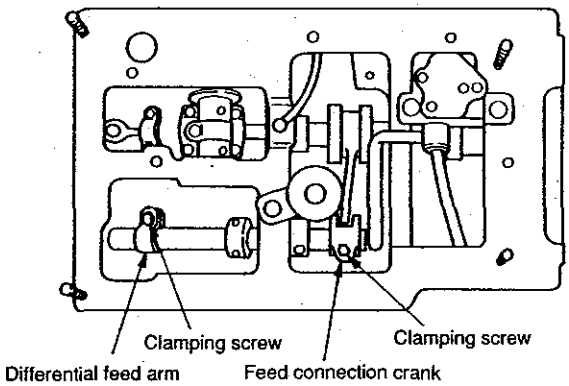 	○ If the clearance provided between the throat plate and the feed dog is too small, they will come in contact with each other when the sewing machine runs at high speed.

(13) Positioning the presser foot

The presser foot should be positioned so that the feed dogs go down under the specified presser foot pressure, and the presser foot sole comes in contact evenly with the throat plate surface.

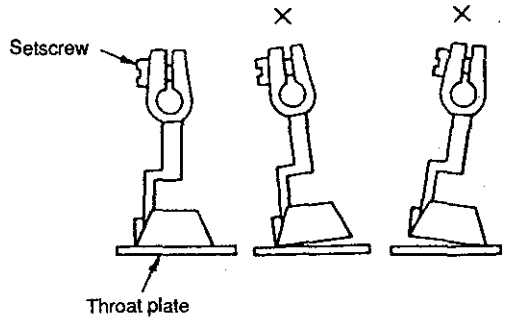

(14) Positioning the upper knife arm shaft

The upper knife shaft should be positioned 34 mm (1.339") above the top surface of the throat plate when it is at its highest position.

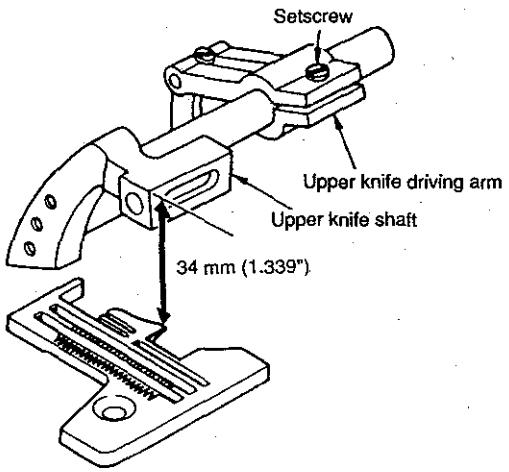

(15) Positioning the upper and lower knives, and available overedge widths

1) Lower knife

The vertical position of the lower knife should be adjusted to make its blade top end flush with the throat plate top surface. The lateral positioning should be done in accordance with a desired overedging width.

2) Upper knife

The upper knife should be positioned vertically so that it engages with the lower knife 0.5(0.020") to 1 mm (0.039") when the upper knife is at the lowest point of its travel.
The lateral positioning should be done in accordance with a desired overedging width.

3) Overedging width

Overedging widths from 2 (0.079") to 4.8 mm (0.189") are obtainable by replacing the components or by using subclass machines.

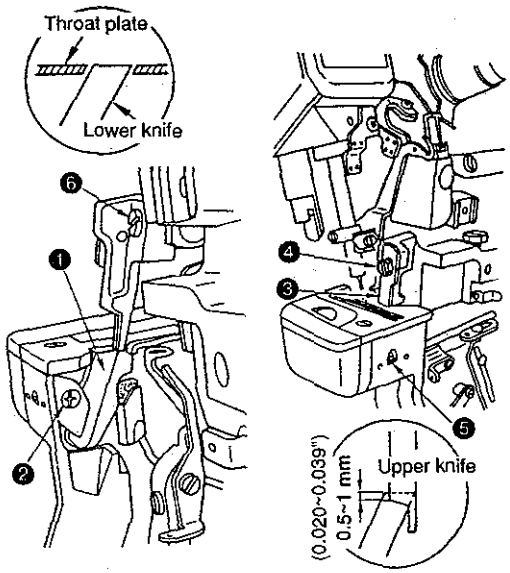

ADJUSTMENT PROCEDURES	RESULTS OF IMPROPER ADJUSTMENT
○ Loosen the set screw, and perform adjustment so that the presser foot bottom comes in contact evenly with the throat plate top surface. Accurate adjustment can be made by using two pieces of thin paper to check for even drawing-out tension. ○ Even contact of the presser foot with the throat plate top surface is achieved rather easily by tightening the screw while pushing the right side of the presser foot downward.	○ Uneven contact will result in bad straight material feed, weak feed power, or puckering.
○ Removing the upper cover, loosen the set screws of the upper knife driving arm, and turn the upper knife shaft to perform vertical positioning. **(Caution) Be sure to fully tighten the set screws since the knife shaft is subjected to high loads.**	○ Improperly positioned upper knife arm shaft will come in contact with the frame. If it is moved with the position of the upper knife unchanged, proper engagement of the knives will be disturbed, prohibiting sharp cutting of the knives.
○ Lower knife Loosen screw ❷ and adjust so that the top edge of the knife ❶ is aligned with the top surface of the throat plate. ○ Upper knife Loosen screw ❹ and adjust so that the upper knife overlaps the lower knife ❶ by 0.5 to 1 mm when upper knife ❸ comes down to the lowest point of its stroke. ○ Overedging width Loosen screw ❺, and fix lower knife ❶ while pressing it to the left. Loosen screw ❻, and move upper knife ❸ until the specified position is reached. Then, fix upper knife ❸ there. Bring the upper knife to the lowest position and loosen screw ❺. Move the lower knife until it comes in contact with the upper knife, then tighten screw ❺. **(Caution) 1. If the lower knife is used, be sure to tighten screw ❺.** **2. After the adjustment, check the sharpness of the knives by cutting a single strand of thread at the front and rear of cutting surface.**	○ The lower knife, if positioned too high, will catch materials or cause no contact of the presser foot with the throat plate top surface. ○ If the lower knife is positioned too low, the cutting width will be changed or materials will be caught by the lower knife. ○ The upper knife, if positioned too high, will fail to cut materials. ○ Unsharp cutting or abnormal wear on the knives will result unless the lower knife is laterally positioned and fixed at a position where it has settled by itself under the upper knife spring.

(16) Resharpening of the knife

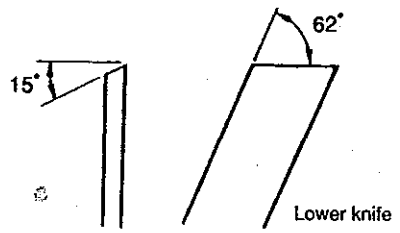

(17) Adjusting the looper cover

○ The looper cover should smoothly close when slowly closing the looper cover with the upper knife in the lowest position of its stroke.

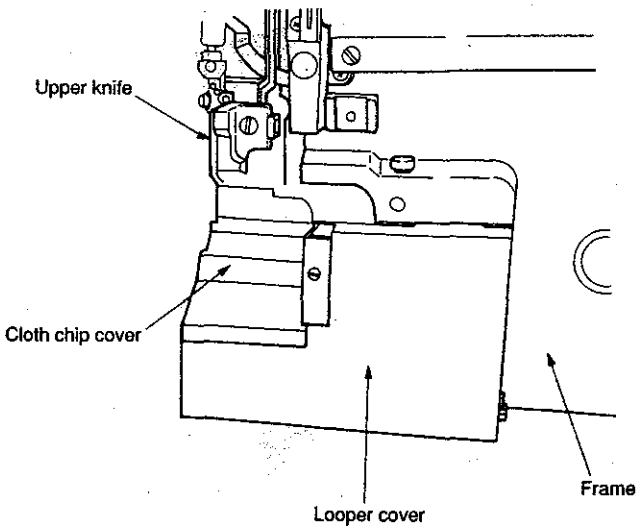

ADJUSTMENT PROCEDURES	RESULTS OF IMPROPER ADJUSTMENT
○ When the lower knife has become dull, fully resharpen it. ○ In principle, no resharpening of the upper knife is done. When the upper knife has become dull, replace it. (This is because the upper knife is a serrated carbide knife.)	○ If the 15° angle of the lower knife is exceeded, the durability of the knife will be deteriorated, often resulting in blade chipping. ○ If the angle is smaller than 15°, the knife will be dull. ○ If the 62° angle is not observed, the knife may catch materials.
○ Close the looper cover, loosen the screw, and move the looper cover guide plate back and forth until the looper cover is brought to a position where the cover smoothly closes. 〈Move the looper cover guide plate until it slightly comes in contact with the looper cover receiving bracket. Now, fix the guide plate by tightening the screw.〉 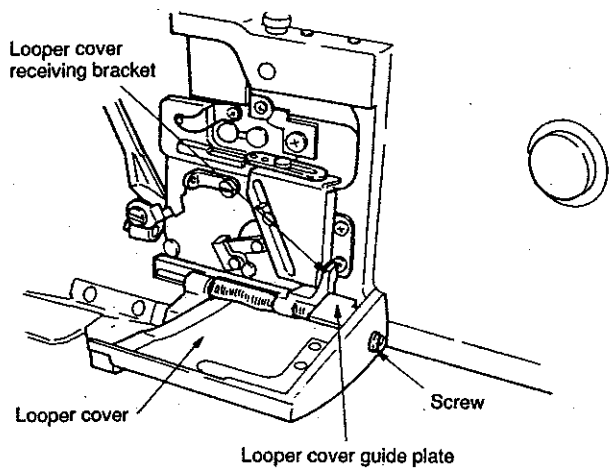 	

(18) Adjusting the cloth chip cover

- When the cloth chip cover is pressed away from you, it should not rattle.
  In addition, the cloth chip cover should not come in contact with the upper knife nor the lower looper.

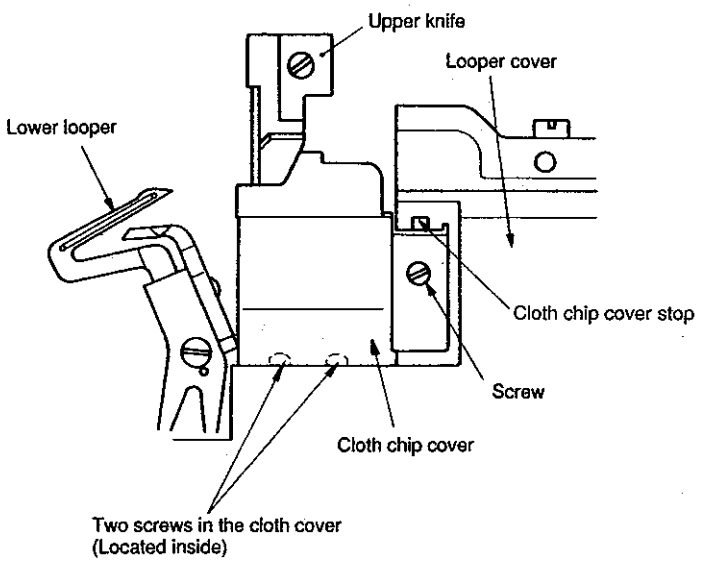

ADJUSTMENT PROCEDURES	RESULTS OF IMPROPER ADJUSTMENT
○ Temporarily tighten the screw with the cloth chip cover stop raised. ○ Loosen the screw in the cloth chip cover, and adjust the longitudinal position of the cloth chip cover. ○ Loosen the screw in the cloth chip cover stop again, and press the cloth chip cover stop downward until the stop slightly comes in contact with the looper cover. Now, tighten the screw. ○ Finally, confirm that the cloth chip cover comes in contact with neither the upper knife nor the looper.	

(19) Adjusting the needle mechanism

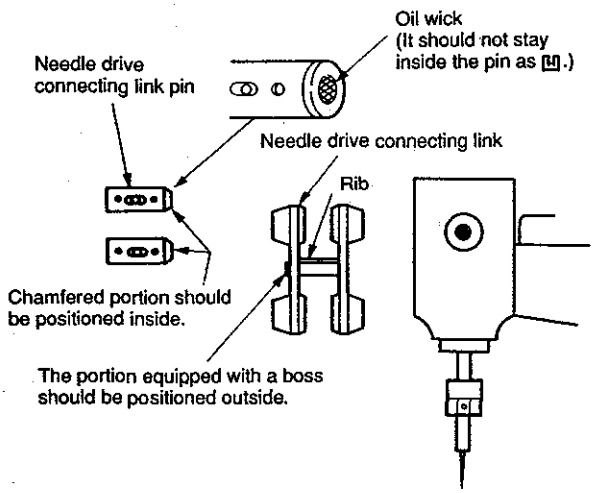

- The oil wick in the needle drive connecting pin should be flush with the chamfered plane of the pin. (If the oil wick sinks inside the chamfered plane, oil will not be fed smoothly.)
- Assemble the needle drive connecting link components so that the portion equipped with a boss comes outside. In addition, the rib located at the center of the link should face upward.

- A clearance of 0.1 mm (0.004") should be provided between the needle lubricating pin and the needle drive connecting link. (Assemble them using a 0.1 mm (0.004") spacer.)
- Install the oil lubricating pin in place with its oil inlet faced above.

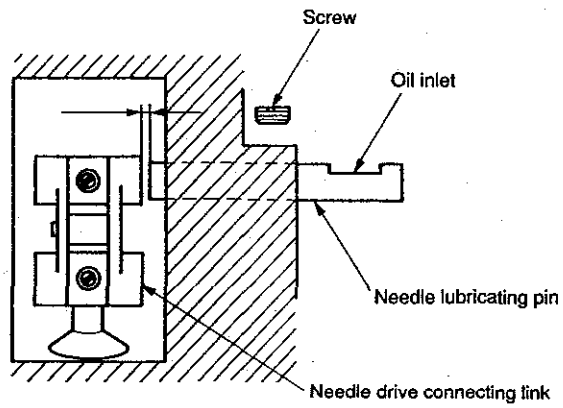

ADJUSTMENT PROCEDURES	RESULTS OF IMPROPER ADJUSTMENT
○ Remove the top cover, side cover and brand label. ○ Remove the rubber plug located under the brand label. ○ If the top cover gasket has been adhered to the frame, also remove the gasket. ○ Loosen the screw in the needle lubricating pin, and remove the pin. 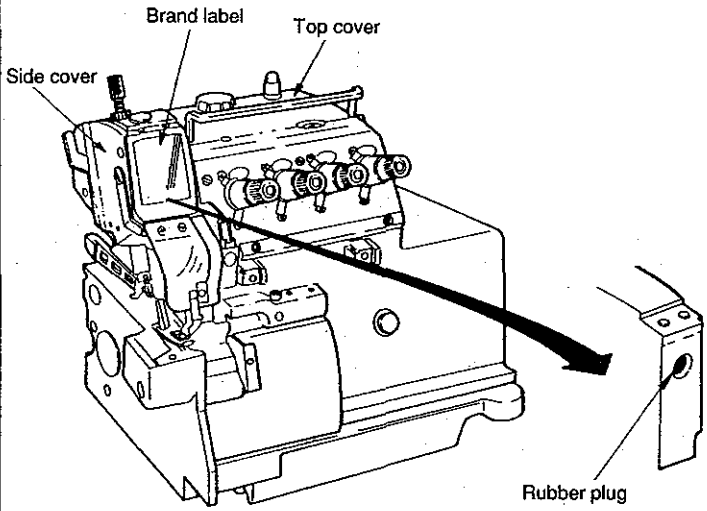 	○ If the oil wick is installed in the needle drive connecting link pin inside the pin as ⊔, oil will not lubricated properly resulting in seizure.
○ Loosen the screw in the needle drive connecting link . ○ Fitting the needle drive connecting link pin in the hole in the frame, thrust the pin until it can be drawn out. 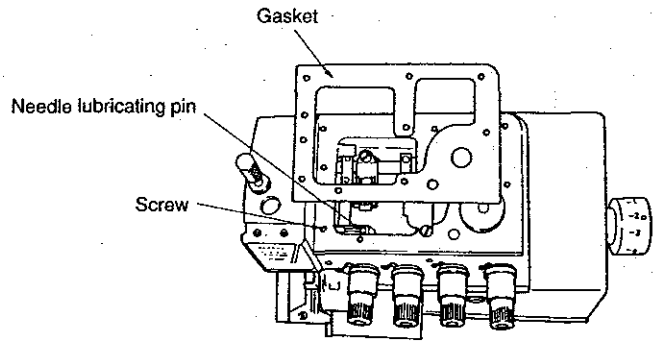 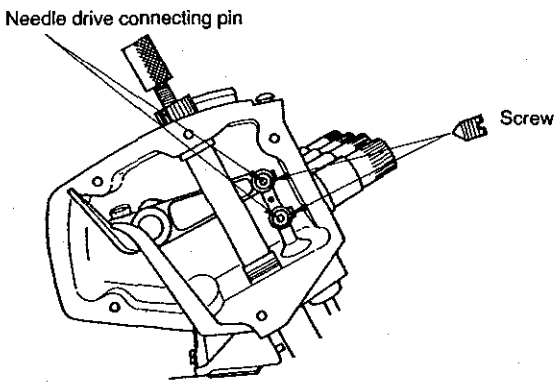 	○ If the clearance provided between the needle lubricating pin and the needle drive connecting link is too small, the related components will come in contact with each other. ○ If the clearance provided between the needle lubricating pin and the needle drive connecting link is too large, oil will not be fed properly resulting in seizure. ○ If the oil inlet does not face upward, oil will not be fed resulting in seizure.

(20) Position of the upper looper lubricating pin

1) Orientation of the lubricating pin

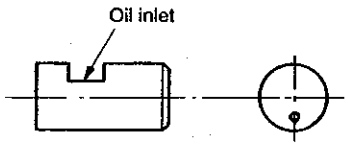

The oil inlet of the upper looper lubricating pin should face upward.

2) Setting the lubricating pin

Set the lubricating pin in position so that a clearance of 0.1 mm is provided between the upper looper lubricating pin and the upper looper bracket.

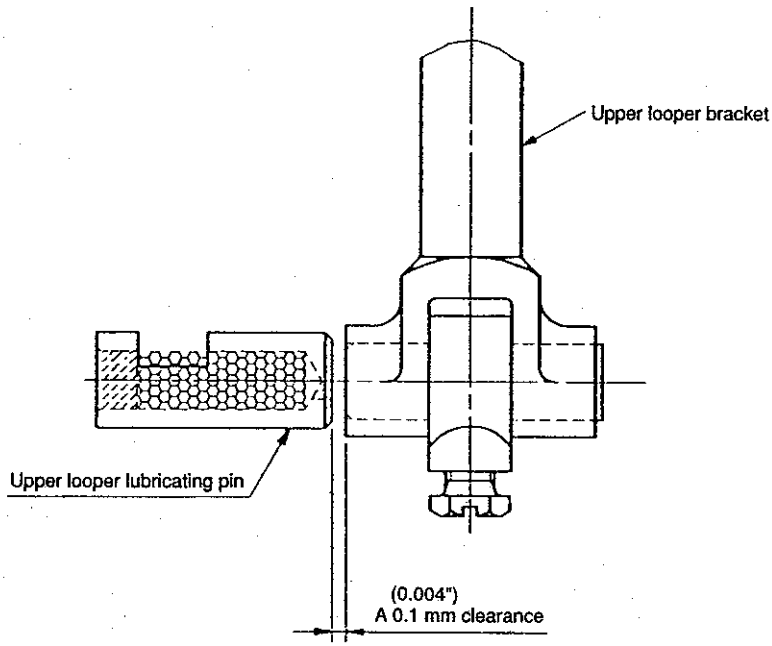

ADJUSTMENT PROCEDURES	RESULTS OF IMPROPER ADJUSTMENT
○ When the upper looper lubricating pin is set in place with the oil inlet faced upward, the lubricating hole is in the lower section as observed from this side. 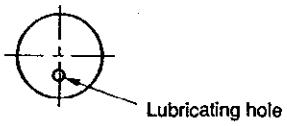 	○ If the oil inlet does not face upward, oil will not be fed resulting in seizure.
○ Remove the oil reservoir, loosen the screw and adjust the position of the upper looper lubricating pin. Adjust the clearance provided between the upper looper lubricating pin and the upper looper bracket using a 0.1 mm spacer. 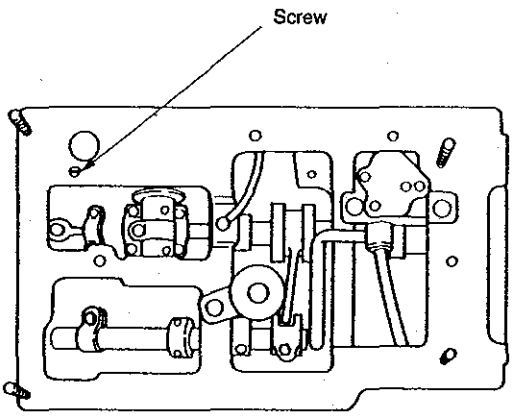 	○ If the clearance provided between the upper looper lubricating pin and the upper looper bracket is too small, the related components will come in contact with each other. ○ If the clearance provided between the upper looper lubricating pin and the upper looper bracket is too large, oil will not be fed resulting in seizure.

(21) Position of the thread guides and the looper thread take-ups

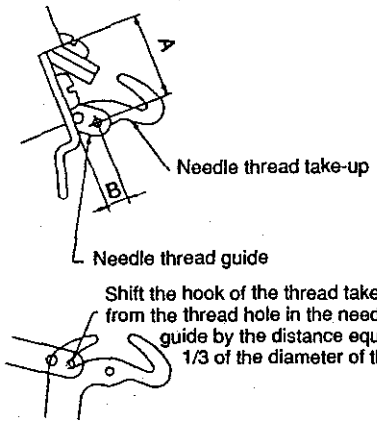

When the needle thread take-up lever is in its lowest dead point, shift the hook of the thread take-up lever from the thread hole in the needle thread guide by the distance equivalent to 1/3 of the diameter of the hole.

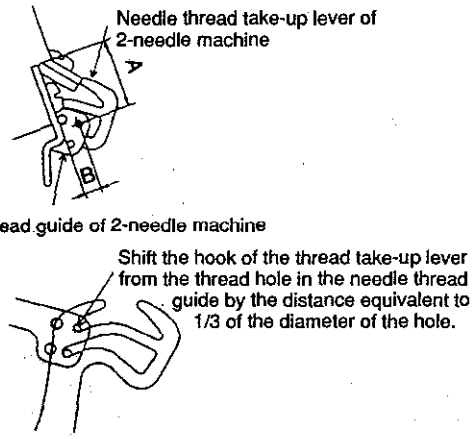

When the needle thread take-up lever is in its lowest dead point, shift the hook of the thread take-up lever from the thread hole in the needle thread guide by the distance equivalent to 1/3 of the diameter of the hole.

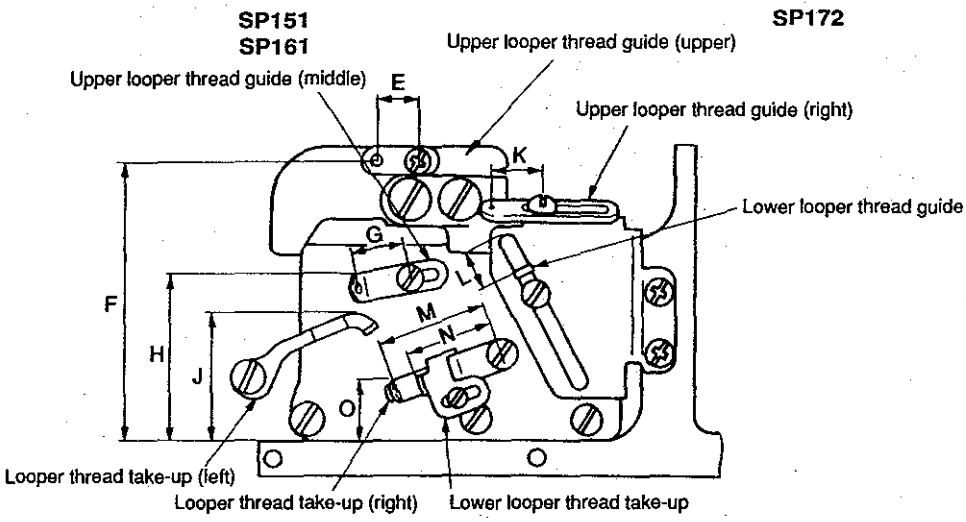

Required adjustment values when the upper looper is at its fully retracted position

Symbol	SP161S (Standard)		SP172 (Standard)		SP151H, SP161H (Bling hemming)	
	General thread	Wooly thread	General thread	Wooly thread	General thread	Wooly thread
A	15.8 (0.622")	←	←	←	←	←
B	4 (0.157")	←	←	←	←	←
E	13.5 (0.531")	←	←	←	←	←
F	Level	←	←	←	←	←
G	15 (0.591")	←	←	←	←	←
H	42 (1.654")	←	←	←	←	←
J	38 (1.496")	←	←	←	←	←
K	13 (0.512")	←	←	←	←	←
L	6 (0.236")	←	←	←	17.5 (0.689")	←
M	28 (1.102")	←	←	←	←	←
N	21 (0.827")	←	←	←	←	←
O	9 (0.354")	←	←	←	←	←

ADJUSTMENT PROCEDURES	RESULTS OF IMPROPER ADJUSTMENT
○ Perform the adjustment by the set screws. 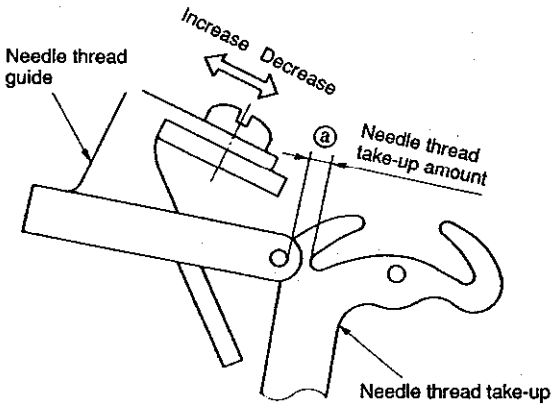 	○ Distance ⓐ When set smaller, better tightness of needle thread stitches will be obtained. When set larger, loose needle thread stitches will result.
○ Distance J is related to the vertical intersecting point of the upper and lower looper threads. Set this distance larger for wooly thread, and set smaller for thin thread which is likely to cause stitch skipping. ○ It is desirable to set distance K larger for stretchy threads such as wooly thread. ○ Set distance L a little larger when making blind hemming soft chain stitches. ○ Set distance N a little smaller for blind hemming or making soft chain stitches. ○ Set distance O larger if stitch skipping occurs due to looper thread slack. Set it smaller for better appearance and touch of produced stitches when wooly thread is used. 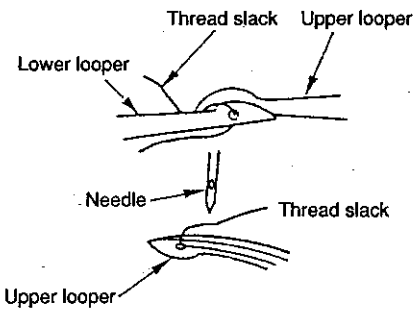 	○ Distance E, F and H exert least influence on stitch formation, however, improper setting of these distances will cause contact between the moving parts. ○ Distance J When set larger, the amount of the upper looper thread will be increased. When set smaller, the amount of the upper looper thread will be decreased. ○ Distance K When set larger, the amount of the upper looper thread will be increased. When set smaller, the amount of the upper looper thread will be decreased. ○ Distance L When set larger, the amount of the lower looper thread will be decreased. When set smaller, the amount of the lower looper thread will be increased. ○ Distance N When set larger, the amount of the lower looper thread will be increased. When set smaller, the amount of the lower looper thread will be decreased. ○ Distance O When set larger, the amount of the upper and lower looper threads will be decreased. When set smaller, the amount of the upper and lower looper threads will be increased.

4. ADDITIONAL INFORMATION AND PRECAUTIONS

(1) Thread tension

1) Strength of tension spring and height of tension adjusting nut

Part No.	Color	Natural length	Operating length	Weight required to compress spring to working length	Height A of nut when " 0 " is set on the scale
115-50100	Purple	19.5mm (0.768")	11.5mm (0.453")	910±50g	54.4±0.5mm (2.142"±0.020")
115-50209	Green	19.5 (0.768")	11.5 (0.453")	640±50	54.4±0.5 (2.142"±0.020")
B3101-804-000	Red	19.5 (0.768")	11.5 (0.453")	430±50	54.4±0.5 (2.142"±0.020")
B3102-804-000	Yellow	17.8 (0.701")	9.8 (0.386")	320±35	52.7±0.5 (2.075"±0.020")
B3103-804-000	Blue	17.3 (0.681")	9.3 (0.366")	150±20	52.2±0.5 (2.055"±0.020")
B3121-804-000	Gray	13.8 (0.543")	5.8 (0.228")	150±20	48.7±0.5 (1.917"±0.020")

2) How to replace the tension spring and set "0" on the scale

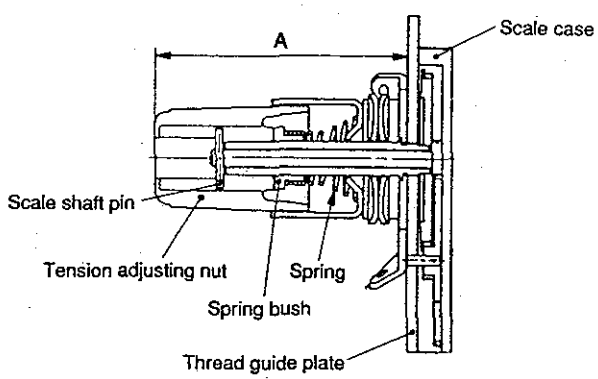

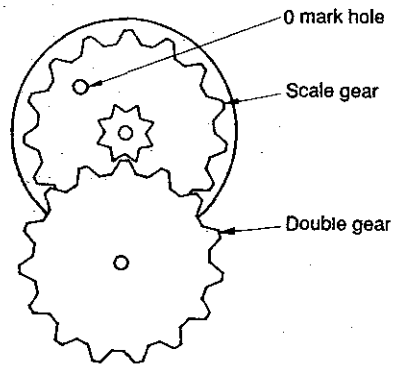

① Remove the tension adjusting nut, scale shaft pin and spring bush, then replace the pin with the exclusive one. When the knob is removed, the scale pin will come off. So, be careful.

② Attach the spring bush and the scale shaft pin in place and screw in the tension adjusting nut. At this time, screw in the knob after aligning the axial direction of the scale shaft pin and the longitudinal direction of the groove inside the knob.

③ Adjust the height of the end face of the knob (dimension A) as measured from the thread guide plate to the value given in the table above.

④ Remove the screw from the thread guide plate. At this time, the scale case and the gear inside the case will come off if the scale case is faced downward. So, be sure to remove the screw from the thread guide plate keeping the scale case held faced upward.

⑤ Remove the scale case.
Remove the double gear.
The scale gear freely rotates. So, position the 0 mark hole straight up. Now, fit the double gear over the scale gear.

⑥ Fit the scale case over the double gear and fix the case with a locknut.

3) Springs used for each model

Model \ Where to use	Needle thread	Upper looper thread	Lower looper thread
SP151H	Blue	—	Yellow
SP161S	Red	Yellow	Blue
SP161H	Yellow	Blue	Yellow
SP172	Red, Yellow	Yellow	Blue

(2) Upper looper of the SP 100

Use a proper upper looper in accordance with the needle No. When ordering, specify the boxed numbers shown in the table at right. The loopers with asterisks will be attached to standard machine heads.

Model	Nos. engraved on upper looper	Needle No.	Upper looper thickness A
SP151	* 1224 [75]	#9 #11 #14	2.05 (0.081")
SP161	* 1224 [73]	#9 #11 #14	2.05 (0.081")
SP172	* 1224 [73]	#9 #11 #14	2.05 (0.081")
SP161S900M048C	* 1224 [71]	#9 #11 #14	2.25 (0.089")
SP172S900HAC SP172S900HAD SP172S900HAE SP172S900HBD SP172S900HBE	1224 [73]	#14 #16 #18	2.05 (0.081")

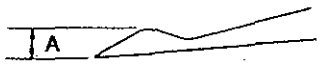

(3) Center-to-center distance of the upper looper holder

The standard center-to-center distances are as shown below.

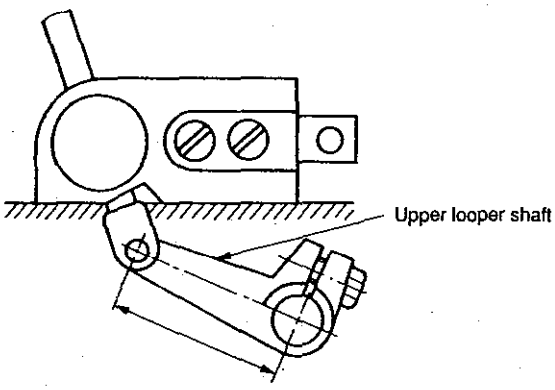

For models other than standard

Model	Center-to-center
SP151H SP161H SP161S800M032 SP161S800M040	39 (1.535")
SP161S800M048C SP161S900M032C SP161S900M040C SP161S900M048C SP172S	41 (1.614")

SP151
SP161 — 39 mm (1.535")

SP172 — 41 mm (1.614")

(4) Caution in assembly

1) Application of sealant

① Bottom surface of the upper looper guide support (Three-bond TB1102)
Apply the sealant to the bottom surface of the upper looper guide support, which contacts with the frame surface.

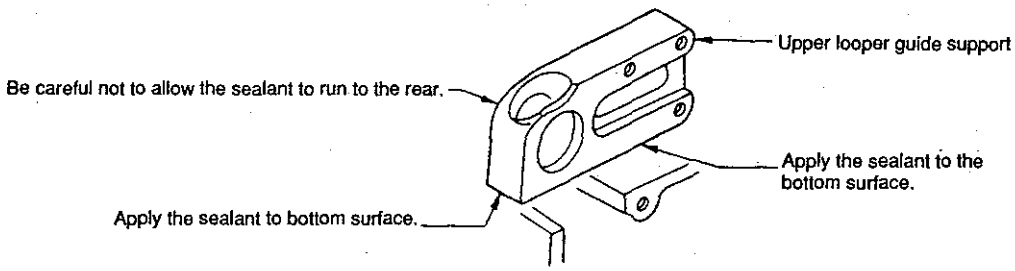

② Apply sealing compound (THREE BOND TB 1104) to four screws, i.e., two screws in the rubber cushion case and two screws in the feed bar.

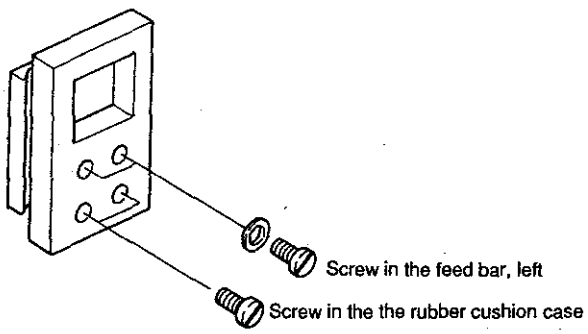

③ Oil shield plate assembly (THREE BOND TB 1104)
Apply the sealant to the inside of the oil shield plate.

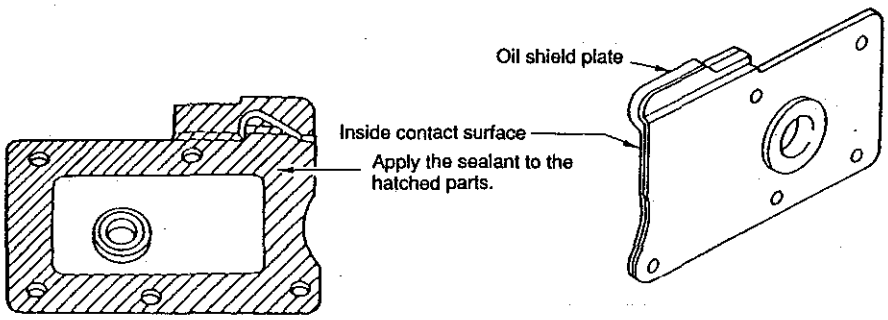

④ Feed cover packings (THREE BOND 1212)
Fit feed cover packings A and B in the feed cover.
Apply sealing compound (THREE BOND 1212) to the packings.

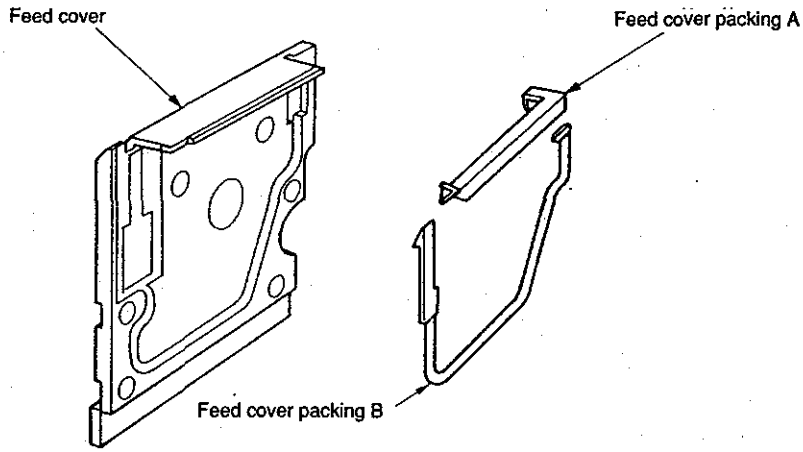

2) Precautions to be taken with respect to the lubricating components

① Feed bar components

- Carefully check the orientation of the rubber cushion.

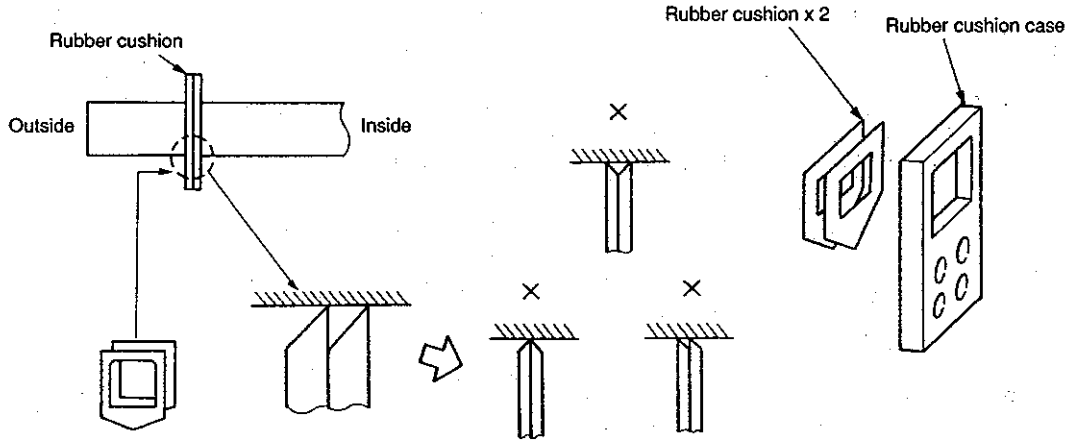

* If the oil shield rubber pieces are assembled as illustrated above, oil leakage will result. So, carefully assemble them.

② Upper looper guide components

- Cut both ends of the oil wick inside the upper looper connecting pin so that they are flush with the pin ends taking care not to allow the oil wick ends to protrude the pin ends.
- Oil is fed to the upper looper lubricating felt through the oil wicks installed inside the frame. The oil wicks should not be longer than the required length.
  So, carefully check the oil wick length.
  One oil wick should be 10 (0.394") mm from the inside of the frame. The turned-up section of the oil wick should be flush with the frame end.
  Another oil wick should come in contact with the lubricating felt.
- Set the upper looper lubricating felt so that it projects 4 mm from the upper looper guide support as illustrated in the figure and confirm that the upper looper bracket comes in contact with the top of the felt.

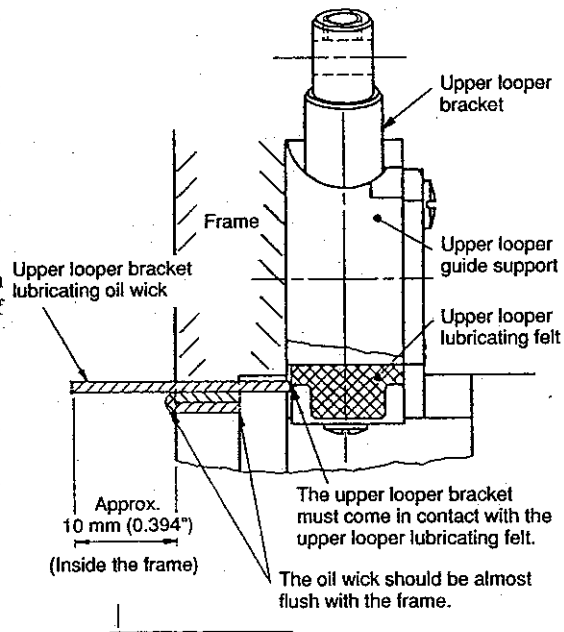

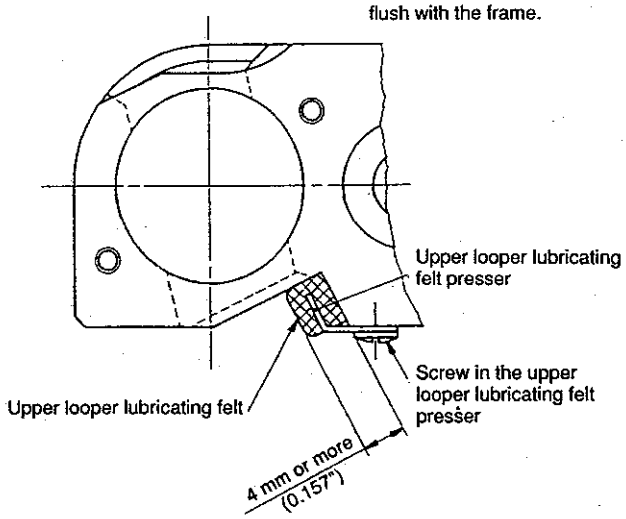

(5) Kinds of motor pulleys, belts and frame support plate bolts

1) Motor pulleys and belts (for SP type machines)

Sewing speed of sewing machine (s.p.m.)	50Hz			60Hz		
	Outside diameter of motor pulley (mm)	Semi-sunken type (inch)	Fully-sunken type (inch)	Outside diameter of motor pulley (mm)	Semi-sunken type (inch)	Fully-sunken type (inch)
8500	160.5 (6.319")	40	36	135.5 (5.335")	38	34
8000	150.5 (5.925")	40	34	125.5 (4.941")	38	32
7500	140.5 (5.531")	38	34	120.5 (4.744")	38	32
7000	130.5 (5.138")	38	34	110.5 (4.350")	36	32
6500	120.5 (4.744")	38	32	100.5 (3.957")	36	32
6000	110.5 (4.350")	36	32	95.5 (3.563")	35	30
5500	100.5 (3.957")	36	32	85.5 (3.366")	35	30
5000	90.5 (3.563")	35	30	80.5 (3.169")	34	30
4500	85.5 (3.366")	35	30	70.5 (2.776")	34	30
4000	75.5 (2.972")	34	30	60.5 (2.382")	34	29

* Use a motor of 3/4 HP (550 W) when the sewing machine runs at 7,500 s.p.m or higher speed.
  Use a motor of 1/2 HP (400 W) when the sewing machine runs at a speed lower than 7,500 s.p.m.

o Be sure to use the motor of which speed does not exceed the sewing speed of the sewing machine.

* Part No. of motor pulley

MTKP0XXX000 (Enter the effective diameter to "XXX.")
If the outside diameter of the motor pulley is 150.5 mm, enter "145" to "XXX". So, the part No. will be MTKP0145000.
If the outside diameter of the motor pulley is 90.5 mm, enter "085" to "XXX". So, the part No. will be MTKP0085000.

* Part No. of belt

MTJVM00XX00 (Enter a number that shows the belt length to "XX.")
If the belt length is 40 inches, enter "40" to "XX." So, the part No. will be MTJVM004000.
If the belt length is 35 inches, enter "35" to "XX." So, the part No. will be MTJVM003500.

2) Pat No. of frame support plate bolt

② Semi-sunken type frame support plate (A) asm. requires four bolts.
Support plate bolt (A) asm. 119-66751

Support plate bolt (A)	119-66702 x 1
Locknut	NS6240630SN x 1
Washer	WP1102016SC x 1
Spring washer	WS1002560KR x 1

Separately from the aforementioned bolts, support plate (B) (115-71700) is available.

Difference of support plate bolts (A) and (B)
Entire length under the neck and length of threaded part

	Entire length (mm)	Length of threaded part (mm)
Bolt (A)	69 (2.717")	39 (1.535")
Bolt (B)	125 (4.921")	95 (3.740")

5. ADJUSTMENT OF THE NEEDLE HEIGHT AND LOOPER TIMING (SP-100 SERIES)

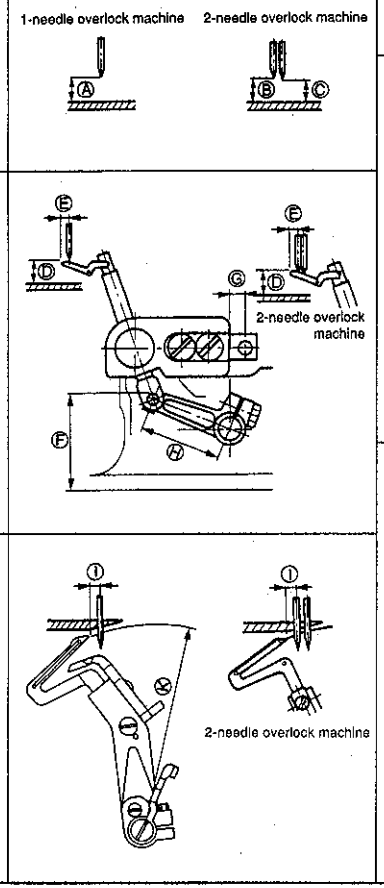

Classification	Description / Subclass	Needle height: 1-needle 2-needle (left) Ⓐ Ⓑ	Needle height: 2-needle (right) Ⓒ	Upper looper components: Upper looper height Ⓓ	Upper looper components: Projection of upper looper Ⓔ	Upper looper components: Height of pin asm Ⓕ	Upper looper components: Position of guide support Ⓖ	Upper looper components: Center-to-center of looper holder Ⓗ	Lower looper components: Returning amount of lower looper Ⓘ	Lower looper components: Radius of lower looper Ⓚ
1-needle overlock machine	SP151H SP161H SP161S800M032 SP161S800M040	10 (0.394")	—	10.7 (0.421")	4 (0.157")	44.85 (1.766")	7(0.276")	39 (1.535")	4 (0.157")	67.4 (2.654")
1-needle overlock machine	SP161S800M048C SP161S900M032C SP161S900M040C	10.5 (0.413")	—	10.9 (0.429")	4.4 (0.173")	47.15 (1.856")	7(0.276")	41 (1.614")	3.6 (0.142")	67.4 (2.654")
1-needle overlock machine	SP161S900M048C	11 (0.433")	—	11 (0.433")	4.8 (0.189")	48.15 (1.896")	6.5(0.256")	41 (1.614")	4 (0.157")	67.4 (2.654")
2-needle overlock machine	SP172S800M SP172S900M	10.5 (0.413")	9.1 (0.358")	10.9 (0.429")	4.4 (0.173")	47.15 (1.856")	7(0.276")	41 (1.614")	3.6 (0.142")	67.4 (2.654")
2-needle overlock machine	SP172S900H	11 (0.433")	9.6 (0.378")	11 (0.433")	4.8 (0.173")	48.15 (1.896")	6.5 (0.256")	41 (1.614")	4 (0.157")	67.4 (2.654")

Gauge	11831807	11893609
	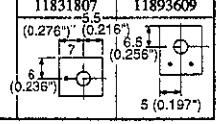	

Looper holder	122214607	12122800
	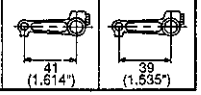	

6. TROUBLES AND CORRECTIVE MEASURES

Trouble	Case (1)	Case (2)	Check and Corrective measures
1. Needle thread breakage	Threading	The thread is entangled with the thread guide, or the machine head has been incorrectly threaded.	Refer to the threading diagram.
	Thread path	If needle hole area and pawl of throat plate, stitch tongue, lower looper, needle thread take-up lever, needle thread presser plate, thread guide or tension disk have scratches, burrs and rust, a resistance will result.	Remove such scratches, burrs, etc. and perform thread path finishing. Replace major components such as looper, which have been deformed, causing thread breakage.
	Needle guard	The needle hits the needle guard intensely, and sharp edges are produced on them, causing thread breakage.	Replace the needle and needle guard if they have worn.
	Needle	The needle is too thin for the thread.	Replace the needle by a proper one.
	Needle heat	The needle gets very hot, depending on the type of materials, number of plies and sewing speed, and causes the thread to burn and break.	Use a thinner needle. Reduce the sewing speed. Use the needle cooler. Use an S-point needle or needle for synthetic thread.
	Thread	The thread is weak because of its poor quality.	Replace the thread by one with good quality.
	Thread tension	The thread tension is too high.	Lower the thread tension. Check whether the needle thread guide goes too far resulting in a higher thread tension.
	Contact	The lower looper has been improperly positioned and strikes the feed dog or throat plate.	Properly position the double chain looper or lower looper.
	Threading	The thread is entangled with the thread guide, or the looper has been incorrectly threaded.	Refer to the threading diagram.
2. Looper thread breakage	Thread path	Scratches, burrs, rust, etc. on the pawl of the throat plate, stitch tongue, looper, looper thread take-up, thread guide, or tension discs causes friction.	Remove such scratches, burrs, etc. and carry out thread path finishing. Replace loopers or other components which have been deformed, causing thread breakage.
	Adjustment of the looper thread take-up	The looper thread take-up or thread guide has been improperly positioned, causing excessive thread tension.	Refer to the pertinent Standard Adjustment.
	Thread tension	The looper thread tension is too high.	Reduce the tension while checking the tension balance other looper thread.
	Thread	The thread is weak because of its poor quality.	Replace the thread by one with good quality.
	Position of the thread guides.	The upper looper thread guide is too high, and the thread taking balance is disturbed, resulting in the thread breakage.	Refer to the pertinent Standard Adjustment.
	Needle heat	The needle gets hot, and the looper thread breaks when it comes in contact with the hot needle at the time of needle stop.	Refer to the clause relating to the needle heat causing needle thread breakage.

Trouble	Case (1)	Case (2)	Check and Corrective measures
3. Needle breakage	Needle entry point	The needle entry has not been correctly adjusted, and the needle strikes the throat plate or presser foot.	Correct the needle entry.
	Upper looper position	The upper looper juts out too much or it is too low.	Refer to the related Standard Adjustment.
	Contact with the looper	The needle strikes the looper, resulting in needle breakage.	Adjust the looper so that the looper does not come in contact with the needle.
	Needle guards	A needle guard has been improperly positioned, causing the needle point to strike it.	Refer to the pertinent Standard Adjustment.
	Needle count	The needle is too thin for the materials.	Replace the needle with a thicker one.
	Thread tension	The thread tension is too high.	Reduce the thread tension.
	Height of the feed dog or needle	The feed dog is too high, or the needle is too low, causing the needle to deflect with resultant needle breakage.	Refer to the related Standard Adjustment.
4. Overlocking needle thread stitches are skipped.	Lower looper	The blade point has defective shape and does not catch needle thread loops.	Replace the lower looper.
The lower looper fails to catch needle thread loops. 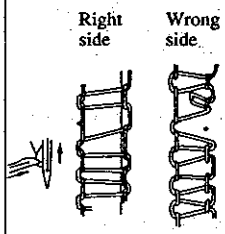	Adjustment of the loopers.	The clearance or the amount of return is not correct.	Refer to the relevant Standard Adjustment.
	Needle thread presser	Presser plate which presses the needle thread fails to move smoothly. In this case, loops fail to be made with consistency.	If the needle thread presser has been deformed by correction or the like, replace it with a new one.
	Needle	The needle is bent or improperly oriented. A needle or DC x 1 is used.	Replace the bent needle. Correctly orient and attach the needle DC x 27. Use a DC x J27 needle for a stretchy thread.
	Needle guards	Incorrect height or clearance prohibits correct guide for the needle. If a needle guard is too high, loops are crushed with consequent stitch skipping.	Refer to the pertinent Standard Adjustment.
	Height of needle	The needle has incorrect height and does not properly catch up loops even if the looper has a correct return.	Refer to the related Standard Adjustment.
	Needle heat	Stitch skipping occurs before the thread breaks due to needle heat.	Refer to the clause relating to the needle thread breakage due to needle heat.
	Positioning of the needle thread guide.	If the needle thread guide has been installed at the position beyond the correct position, thread take-up amount will be excessive, making small thread loops.	Refer to the pertinent Standard Adjustment.
	Threading	The thread has been entangled with a thread guide. Threading has not been correctly done.	See the threading diagram.

Trouble	Case (1)	Case (2)	Check and Corrective measures
5. Lower looper stitches are skipped.	Upper looper	The blade point has a bad shape, and fails to catch the loops.	Replace the upper looper with badly deformed blade point.
The upper looper does not catch the lower looper thread. 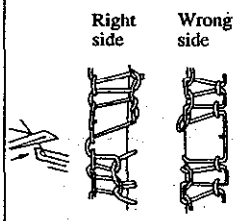	Lower looper	The clearance between the needle and the back of lower looper are not correct.	Replace the lower looper having a deformed tip.
	Adjustment of the loopers.	The feed amount of the lower looper, height of the upper looper, or clearance produced at time of crossing of the upper and lower loopers are not correct.	Refer to the relevant Standard Adjustment.
	Thread amount	Too much lower looper thread is fed, giving slack of thread. Slack of thread	Slightly lower the looper thread take-up (left) (reduction in distance J). Slightly raise the looper thread take-up (right) (increase in dimension O) to decrease the amount of thread. Lower the lower looper thread guide (increase in distance L), and decrease distance N to reduce the amount of thread.
	Threading	The thread has been entangled with a thread guide. Threading has not been done correctly.	Refer to the threading diagram.
6. Upper looper thread stitches are skipped.	Threading	The thread has been entangled with a thread guide. Threading has not been done correctly.	Refer to the threading diagram.
The needle does not take the upper looper thread. 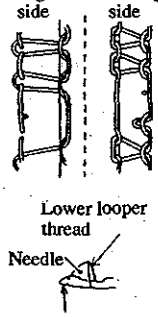	Needle height	The needle, if positioned too high or low, may fail to catch the upper looper thread.	Refer to the related Standard Adjustment.
	Needle	The needle is bent or crushed in its point.	Replace the needle. At this time, be sure to eliminate the cause for such needle bend or needle point crush.
	Adjustment of the upper looper.	The height of the blade point is not correct, making the upper looper unable to properly pass the thread to the needle. The clearance between the needle and the back of the upper looper is not correct.	Refer to the relevant Standard Adjustment.
	Amount of thread	Excessive upper looper thread is fed, producing slack of thread. 	Slightly lower the looper thread take-up (left) (to decrease J). Or shorten the upper looper thread guide (right) (to decrease K) to reduce the amount of thread. Slightly raise the looper thread take-up (right) (increase in distance O) to decrease the amount of thread. If the thread tension is not enough, increase it.

Trouble	Case (1)	Case (2)	Check and Corrective measures
7. Overlocking chain-off thread is bad. (Provided that no chain-off trouble occurred when sewing operation was done with materials set on the machine.)	Position of the throat plate	The throat plate has been improperly positioned longitudinally, and chain-off thread gets in between the main feed dog and throat plate, causing defective chain-off thread.	Correct the position of the throat plate.
	Feed dog	The auxiliary fee dog is too high, and interferes with chain-off thread. The auxiliary feed dog is too low. (Lower than the main feed dog by more than 0.5 mm)	Refer to the pertinent Standard Adjustment.
		The auxiliary feed dog has scratch	Repair or replace the auxiliary feed dog.
	Adjustment of looper	Adjustment of loopers for producing chain-off thread requires higher accuracy as compared with the adjustment of them for sewing materials.	Refer to the relevant Standard Adjustment.
	Thread tension	The thread tension is too low.	Slightly increase the tension.
		The needle thread tension is too high, causing damaged balance with other thread tension.	Check whether the needle thread guide has been improperly positioned (too far) and needle thread tension has become too high.
8. Overlocking needle thread is loose.	Position of the needle thread take-up guide and needle thread guide.	They are positioned too high, and the thread take-up draws out excessive needle thread.	Refer to the pertinent Standard Adjustment.
	Thread tension	The thread tension balance has been disturbed.	Refer to the Standard Adjustment for the looper thread take-up components, and increase the tension if necessary.
	Needle	The needle is too thin for the thread used.	Replace it with a proper one.
9. Uneven overlocking stitches The knotting position of the upper and lower threads varies as shown below. 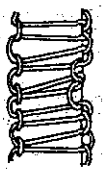	Looper thread tension	The upper and lower looper thread tensions are not enough.	Slightly increase the upper and lower looper thread tensions.
	Looper thread take-up	The looper thread take-up (left) is too high.	Slightly lower the looper thread take-up (left)
	Knife width	The knife width is unsuited for the overedging width.	Make the overedging width slightly smaller than that given for the knife width.
	Thread path	Scratches on the thread path catch thread.	Check the thread path for scratches.
	Presser foot	The presser foot comes into contact unevenly with the throat plate and feed dogs and tends to meander.	Make the presser foot come into contact with them evenly.
	Thread stand	Thread is not smoothly fed.	Adjust the thread stand so that the thread is fed smoothly.
10. The looper thread bulges out	Knife width	The knife width is too small for the overedging width.	Adjust the knife blade width to the normal value.
	Looper thread take-up adjustment	The looper thread take-up draws out excessive looper thread.	Raise the looper thread take-up (right) (increase in distance O)
11. Looper thread bite	Knife width	The knife width is too large for the overedging width.	Use a knife having width suited to the overedging width.
	Adjustment of the looper thread take-up	The looper thread take-up draws out insufficient amount of looper thread.	Lower the looper thread take-up (right) (reduction in distance O)

Trouble	Case (1)	Case (2)	Check and Corrective measures
12. Knotting position is not correct.	Threading	Re-threading after thread breakage, etc. has been done erroneously.	See the threading diagram.
Right side 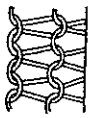 Knots are deflected to the upper looper side.	Adjustment of the looper thread take-up	The height of the looper thread take-up (left) is not correct.	Raise the looper thread take-up (left) to increase the amount of upper looper thread, and the knotting position moves toward the lower looper side.
		The upper looper thread guide (right) is too short.	Increase distance K.
13. Uneven material feed	Presser foot pressure	The presser foot pressure is too high.	Reduce the presser foot pressure except for the uneven material feed due to puckering.
	Presser foot	The hinge is too stiff.	Remove the stiffness provided no hinge play is produced.
		Scratches on or defective finish on the presser foot sole produce friction between the presser foot and materials.	Buff the presser foot sole for good surface finish.
	Tilt of feed dogs	The front is too high.	Make the front down. However, be sure to align the differential feed dog with the main feed dog.
	Height of feed dogs	A different in level exists between the main feed dog and differential feed dog.	Eliminate the difference in level.
	Adjustment of differential feed	The differential feed has been improperly adjusted.	Provide differential feed suited to the material.

7. DIMENSIONS OF TABLE (SEMI-SUNKEN TYPE)

(1) Semi-sunken type

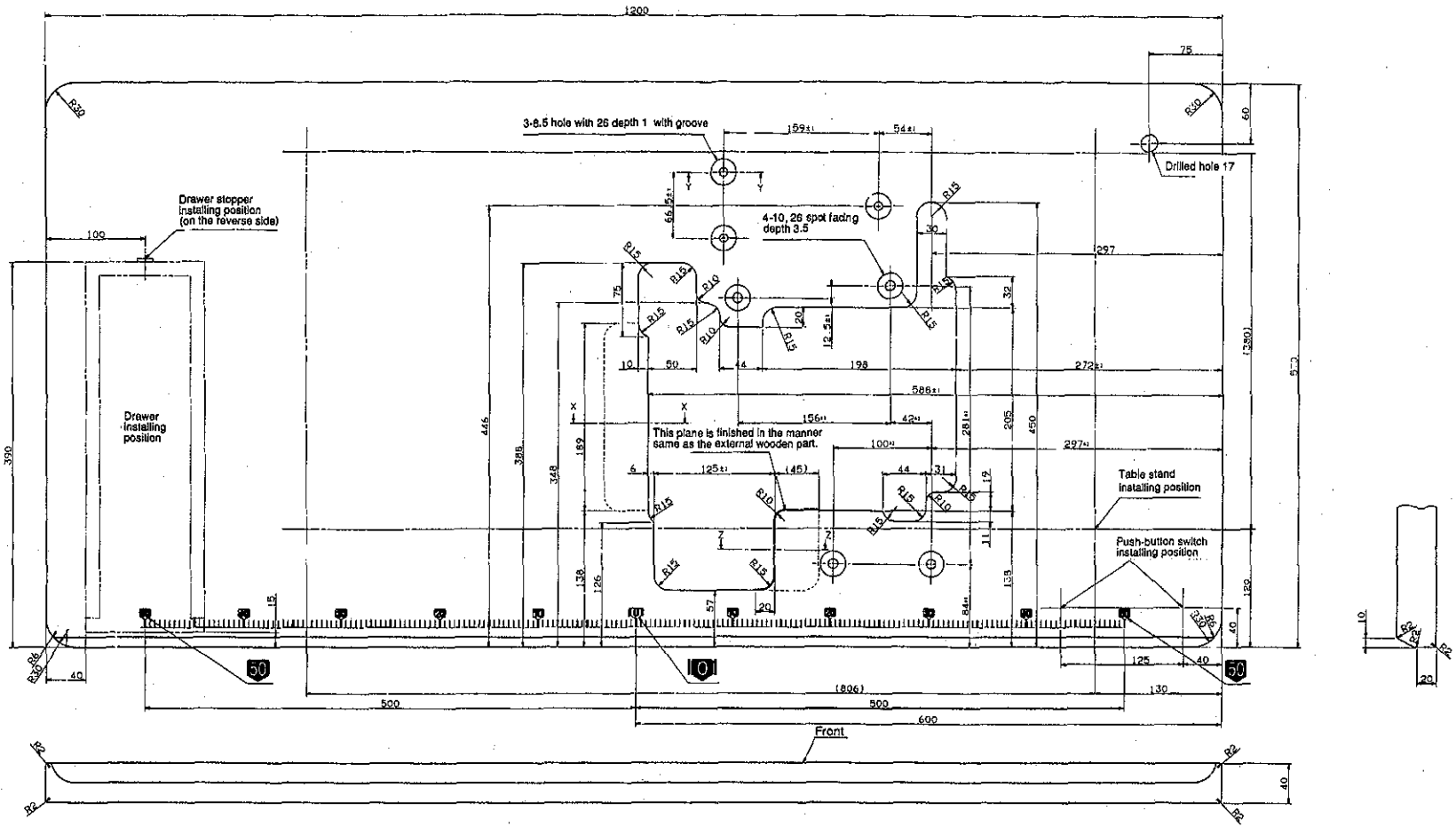

Part No. of table 12221602
(Note) All dimensions are in millimeter.
Detailed dimensions of section WW, section ZZ, section YY and section VV

inch → mm CONVERSION TABLE

1"=25.4mm

	inch		0"	1"	2"	3"	4"	5"	6"	7"	8"
		0		25.4	50.8	76.2	101.6	127	152.4	177.8	203.2
	1/64	.015625	0.3969	25.7969	51.1969	76.5969	101.9969	127.3969	152.7969	178.1969	203.5969
1/32		.03125	0.7938	26.1938	51.5938	76.9938	102.3938	127.7938	153.1938	178.5938	203.9938
	3/64	.046875	1.1906	26.5906	51.9906	77.3906	102.7906	128.1906	153.5906	178.9906	204.3906
1/16		.0625	1.5875	26.9875	52.3875	77.7875	103.1875	128.5875	153.9875	179.3875	204.7875
	5/64	.078125	1.9844	27.3844	52.7844	78.1844	103.5844	128.9844	154.3844	179.7844	205.1844
3/32		.09375	2.3812	27.7812	53.1812	78.5812	103.9812	129.3812	154.7812	180.1812	205.5812
	7/64	.109375	2.7781	28.1781	53.5781	78.9781	104.3781	129.7781	155.1781	180.5781	205.9781
1/8		.125	3.175	28.575	53.975	79.3750	104.775	130.175	155.5750	180.975	206.375
	9/64	.140625	3.5719	28.9719	54.3719	79.7719	105.1719	130.5719	155.9719	181.3719	206.7719
5/32		.15625	3.9688	29.3688	54.7688	80.1688	105.5688	130.9688	156.3688	181.7688	207.1688
	11/64	.171875	4.3656	29.7656	55.1656	80.5656	105.9656	131.3656	156.7656	182.1656	207.5656
3/16		.1875	4.7625	30.1625	55.5625	80.9625	106.3625	131.7625	157.1625	182.5625	207.9625
	13/64	.203125	5.1594	30.5594	55.9594	81.3594	106.7594	132.1594	157.5594	182.9594	208.3594
7/32		.21875	5.5562	30.9562	56.3562	81.7562	107.1562	132.5562	157.9562	183.3562	208.7562
	15/64	.234375	5.9531	31.3531	56.7531	82.1531	107.5531	132.9531	158.3531	183.7531	209.1531
1/4		.25	6.35	31.75	57.15	82.55	107.95	133.35	158.75	184.15	209.55
	17/64	.265625	6.7469	32.1469	57.5469	82.9469	108.3469	133.7469	159.1469	184.5469	209.9469
9/32		.28125	7.1438	32.5438	57.9438	83.3438	108.7438	134.1438	159.5438	184.9438	210.3438
	19/64	.296875	7.5406	32.9406	58.3406	83.7406	109.1406	134.5406	159.9406	185.3406	210.7406
5/16		.3125	7.9375	33.3375	58.7375	84.1375	109.5375	134.9375	160.3375	185.7375	211.1375
	21/64	.328125	8.3344	33.7344	59.1344	84.5344	109.9344	135.3344	160.7344	186.1344	211.5344
11/32		.34375	8.7312	34.1312	59.5312	84.9312	110.3312	135.7312	161.1312	186.5312	211.9312
	23/64	.359375	9.1281	34.5281	59.9281	85.3281	110.7281	136.1281	161.5281	186.9281	212.3281
3/8		.375	9.525	34.925	60.325	85.725	111.125	136.525	161.925	187.325	212.725
	25/64	.390625	9.9219	35.3219	60.7219	86.1219	111.5219	136.9219	162.3219	187.7219	213.1219
13/32		.40625	10.3188	35.7188	61.1188	86.5188	111.9188	137.3188	162.7188	188.1188	213.5188
	27/64	.421875	10.7156	36.1151	61.5156	86.9156	112.3156	137.7156	163.1156	188.5156	213.9156
7/16		.4375	11.1125	36.5125	61.9125	87.3125	112.7125	138.1125	163.5125	188.9125	214.3125
	29/64	.453125	11.5094	36.9094	62.3094	87.7094	113.1094	138.5094	163.9094	189.3094	214.7094
15/32		.46875	11.9062	37.3062	62.7062	88.1062	113.5062	138.9062	164.3062	189.7062	215.1062
	31/64	.484375	12.3031	37.7031	63.1031	88.5031	113.9031	139.3031	164.7031	190.1031	215.5031
1/2		.5	12.7	38.1	63.5	88.9	114.3	139.7	165.1	190.5	215.9
	33/64	.515625	13.0969	38.4969	63.8969	89.2969	114.6969	140.0969	165.4969	190.8969	216.2969
17/32		.53125	13.4938	38.8938	64.2938	89.6938	115.0938	140.4938	165.8938	191.2938	216.6938
	35/64	.546875	13.8906	39.2906	64.6906	90.0906	115.4906	140.8906	166.2906	191.6906	217.0906
9/16		.5625	14.2875	39.6875	65.0875	90.4875	115.8875	141.2875	166.6875	192.0875	217.4875
	37/64	.578125	14.6844	40.0844	65.4844	90.8844	116.2844	141.6844	167.0844	192.4844	217.8844
19/32		.59375	15.0812	40.4812	65.8812	91.2812	116.6812	142.0812	167.4812	192.8812	218.2812
	39/64	.609375	15.4781	40.8781	66.2781	91.6781	117.0781	142.4781	167.8781	193.2781	218.6781
5/8		.625	15.875	41.275	66.675	92.075	117.475	142.875	168.275	193.675	219.075
	41/64	.640625	16.2719	41.6719	67.0719	92.4719	117.8719	143.2719	168.6719	194.0719	219.4719
21/32		.65625	16.6688	42.0688	67.4688	92.8688	118.2688	143.6688	169.0688	194.4688	219.8688
	43/64	.671875	17.0656	42.4656	67.8656	93.2656	118.6656	144.0656	169.4656	194.8656	220.2656
11/16		.6875	17.4625	42.8625	68.2625	93.6625	119.0625	144.4625	169.8625	195.2625	220.6625
	45/64	.703125	17.8594	43.2594	68.6594	94.0594	119.4594	144.8594	170.2594	195.6594	221.0594
23/32		.71875	18.2562	43.6562	69.0562	94.4562	119.8562	145.2562	170.6562	196.0562	221.4562
	47/64	.734375	18.6531	44.0531	69.4531	94.8531	120.2531	145.6531	171.0531	196.4531	221.8531
3/4		.75	19.05	44.45	69.85	95.25	120.65	146.05	171.45	196.85	222.25
	49/64	.765625	19.4469	44.8469	70.2469	95.6469	121.0469	146.4469	171.8469	197.2469	222.6469
25/32		.78125	19.8438	45.2438	70.6438	96.0438	121.4438	146.8438	172.2438	197.6438	223.0438
	51/64	.796875	20.2406	45.6406	71.0406	96.4406	121.8406	147.2406	172.6406	198.0406	223.4406
13/16		.8125	20.6375	46.0375	71.4375	96.8375	122.2375	147.6375	173.0375	198.4375	223.8375
	53/64	.828125	21.0344	46.4344	71.8344	97.2344	122.6344	148.0344	173.4344	198.8344	224.2344
27/32		.84375	21.4312	46.8312	72.2312	97.6312	123.0312	148.4312	173.8312	199.2312	224.6312
	55/64	.859375	21.8281	47.2281	72.6281	98.0281	123.4281	148.8281	174.2281	199.6281	225.0281
7/8		.875	22.225	47.625	73.025	98.425	123.825	149.225	174.625	200.025	225.425
	57/64	.890625	22.6219	48.0219	73.4219	98.8219	124.2219	149.6219	175.0219	200.4219	225.8219
29/32		.90625	23.0188	48.4188	73.8188	99.2188	124.6188	150.0188	175.4188	200.8188	226.2188
	59/64	.921875	23.4156	48.8156	74.2156	99.6156	125.0156	150.4156	175.8156	201.2156	226.6156
15/16		.9375	23.8125	49.2125	74.6125	100.0125	125.4125	150.8125	176.2125	201.6125	227.0125
	61/64	.953125	24.2094	49.6094	75.0094	100.4094	125.8094	151.2094	176.6094	202.0094	227.4094
31/32		.96875	24.6062	50.0062	75.4062	100.8062	126.2062	151.6062	177.0062	202.4062	227.8062
	63/64	.984375	25.0031	50.4031	75.8031	101.2031	126.6031	152.0031	177.4031	202.8031	228.2031