MAYTONI
DECORATIVE LIGHTING

Instruction

MOD177PL-04B

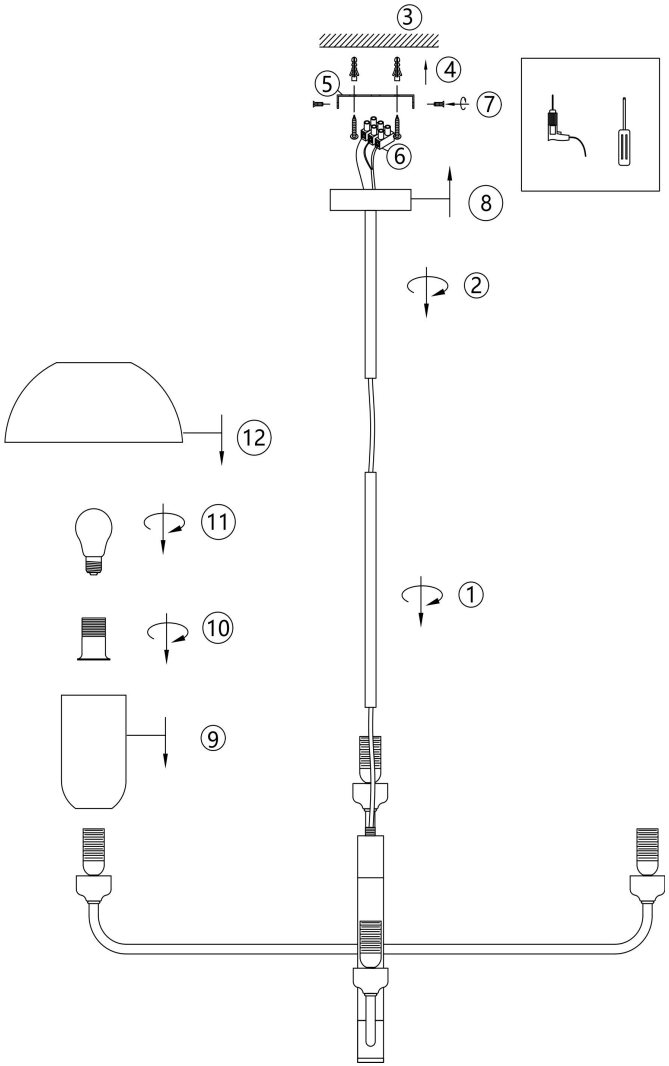

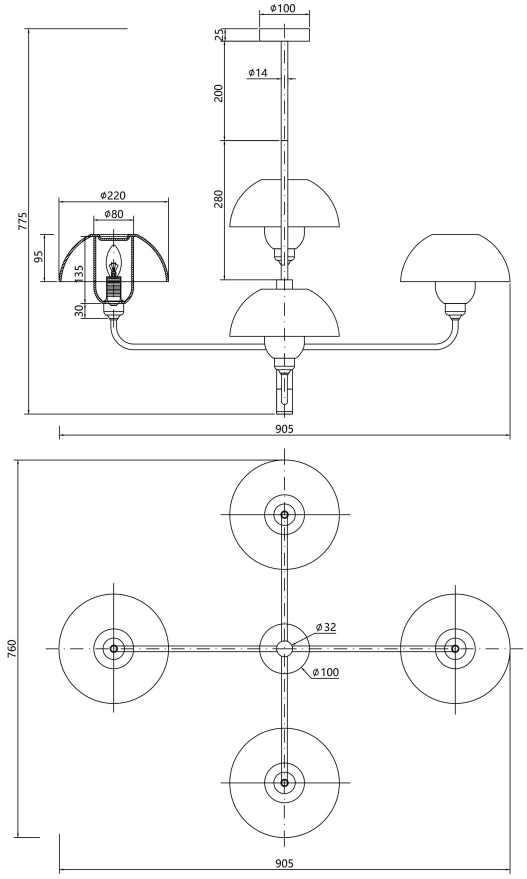

4xE14 40W

Model: MOD177PL-04B

Collection: Modern

Series: Memory

Pendant Lamps

This product contains a light source of energy efficiency class