# UBG 220-86 PW
# URBAN FRAGRANITE SINK

**NOTE:** Flushmount installation requires the minimum benchtop thickness to be 20mm and a 9mm deep recess into the benchtop

## PRODUCT INFORMATION

| | |
|---|---|
| **Installation** | Topmount/Flushmount |
| **Dimensions** | 860(W) x 500(H)mm |
| **Cabinet Base** | 900mm |
| **Bowl Size** | 432(W) x 425(H) x 230(D)mm/42L<br>341(W) x 364(H) x 220(D)mm/27L |
| **Bowl Radius** | 15mm |
| **Cut-Out Size** | 824 x 464mm, cr=15 |
| **Cut-Out Template** | No |
| **Waste Outlet** | Semi Integrated Waste |
| **Overflow** | Yes |
| **Tap Holes** | ø35mm |
| **Remote Waste** | No |
| **Finish** | Fragranite |

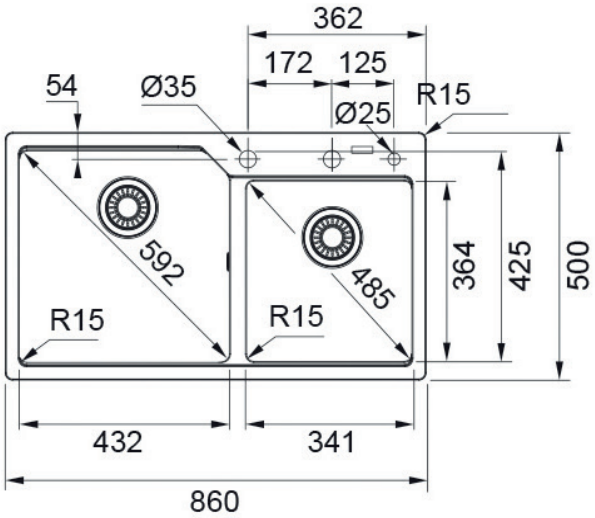


1 ACCESSORIES AVAILABLE  1 ACCESSORIES INCLUDED

## ACCESSORIES

1

**DT 651**
Extension Drainer

2

**SB 950**
Strainer Bowl

3

**RM 44**
Rollamat

4

**DB 664**
Drainer Basket

5

**CB 750**
Chopping Board

LAST UPDATED: 15 NOV 2019