STUDIO BAGNO

SPY 40

STYLE

Bench / Wall Basin

CODE

NTH : SPY40/0

1TH : SPY40/1

COLOURS

White
Premium Colours Available

OVERFLOW & WASTE

32 mm non-overflow plug
& waste not included.

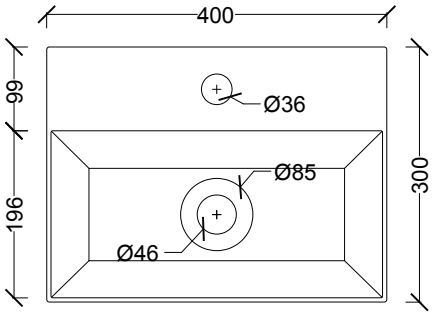

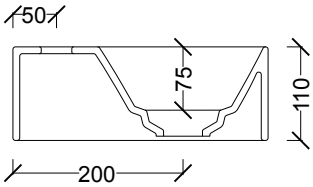

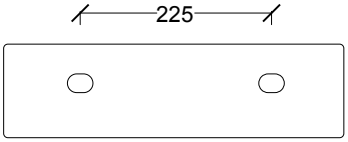

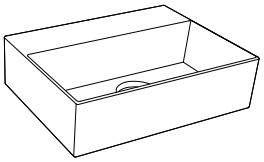

Note: All dimensions are in millimetres and are subject to normal manufacturing variances.
Studio Bagno Pty Ltd reserves the right to vary specifications at any time without notice. Date created: 25/07/2018