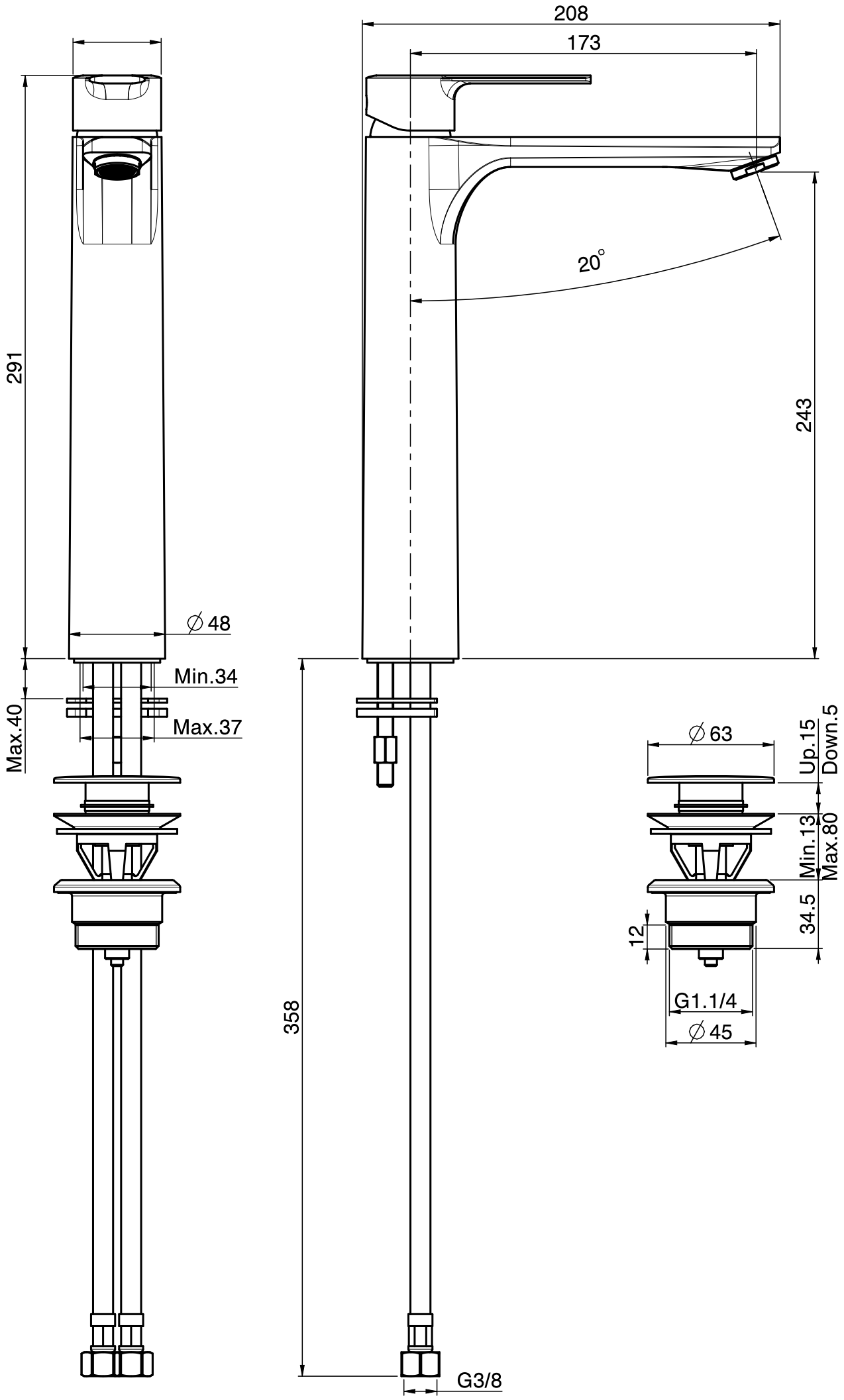

This drawing is the property of FIMA Carlo Frattini. Any complete or pa tial reproduction, or any transmission to third party without FIMA Carlo Frattini authorization is forbidden.