DESCRIPTION

- Modern & Minimalist design
- Round Corner Back to Wall
- Gloss white, UV stabilized, sanitary grade acrylic
- Inbuilt steel support frame
- Adjustable steel legs, No overflow
- No-porous, blemish resistant and easy maintenance
- Chrome waste included with bath

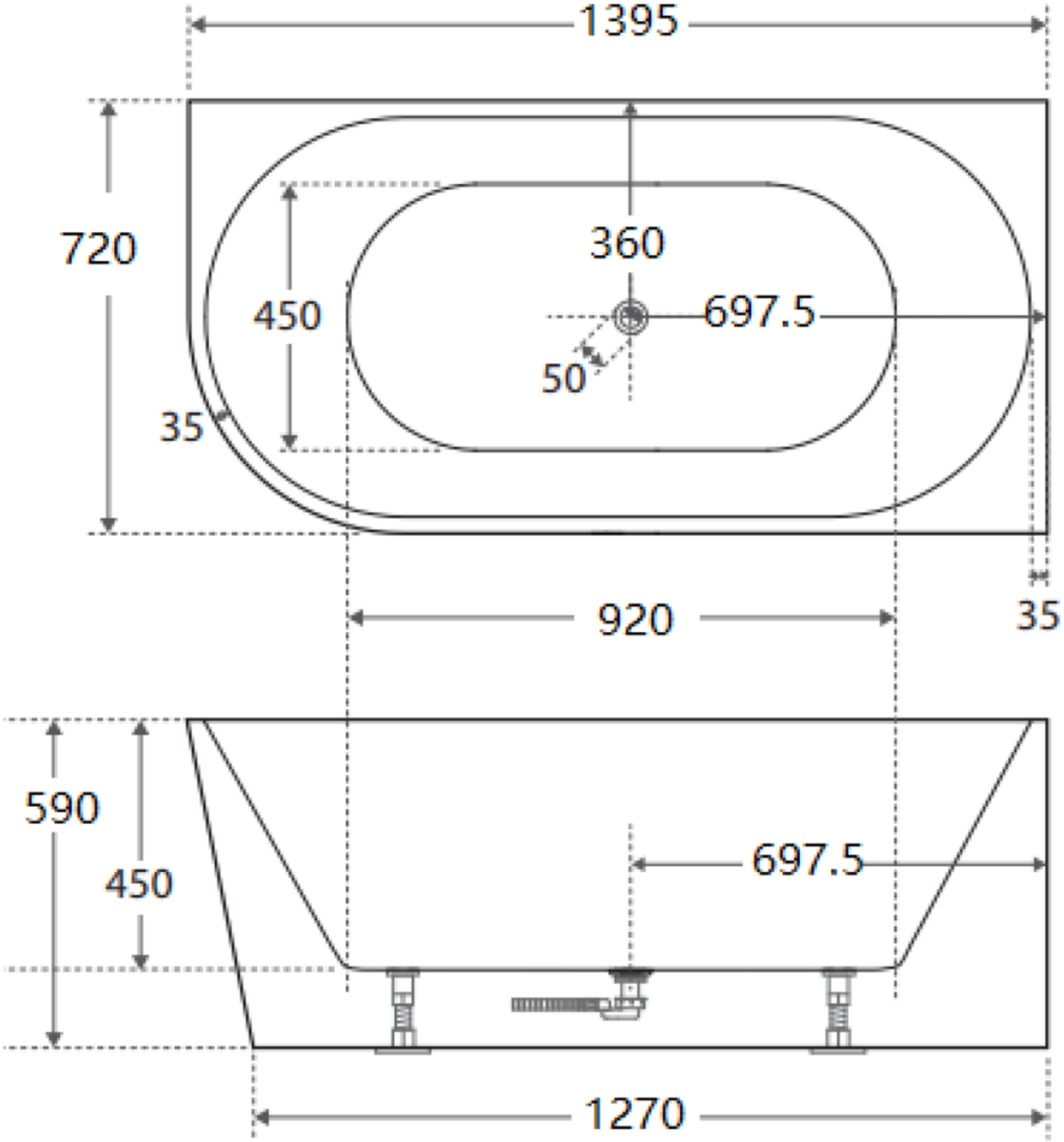

Prices include GST. All measurements are in millimeters and subject to change without notice. For products, please allow +/- 10mm tolerance for manufacturing variance.