GAS TURBINE FLOW METER

10+ years manufacture experience

Gas Turbine Flow Meter
Total
Q
P
000000028
000000
00995
206
N100

New High-tech Enterprise

CE

Ex-proof

ISO

APPLICATION

Mainly used for Natural gas, LPG, Coal gas etc.

CLEAN

LOW VELOCITY

SINGLE PHASE

DRY

Gas Turbine Flow Meter
Total
Q
P
000000.028
0000.00
0099.5
20.6
DN100

- Accurate Measurement
- Trade Settlement

Widely used in various industries

Natural gas transmission

Urban gas industry

Petrochemical industry

Electric power industry

DETAILS

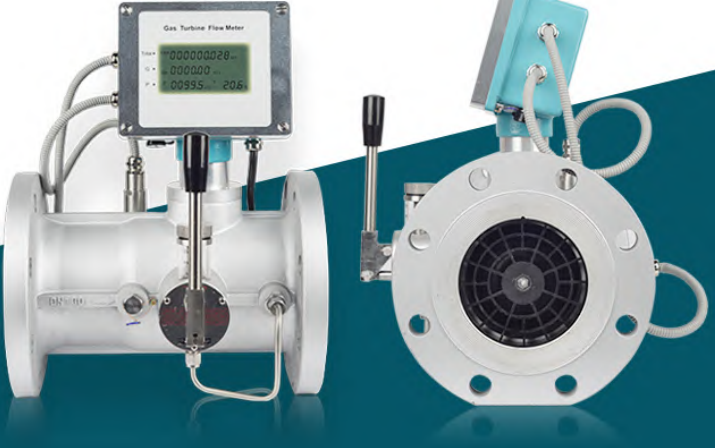

1 LCD HD DISPLAY

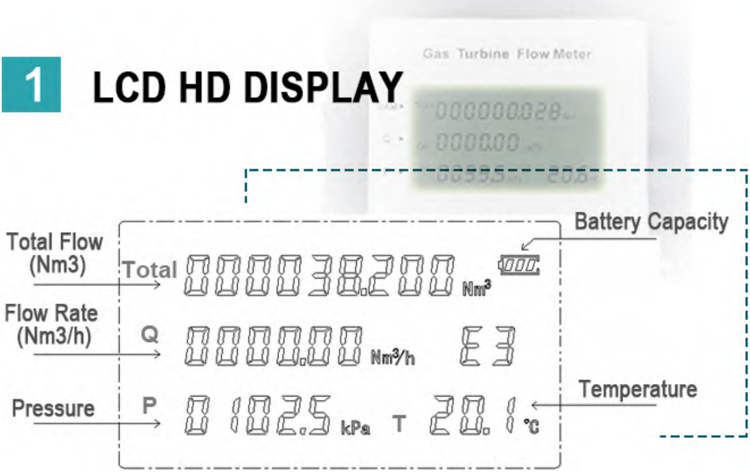

ROTATABLE CONVERTER 2

- Digital board,strong anti-interference ability
- Support display to rotate 360°
- Easy to read data in different directions

3 INTELLIGENT VOLUME CORRECTOR

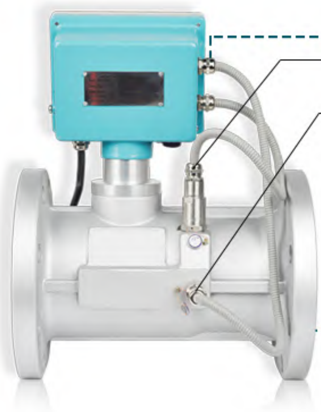

- Dynamic detect temperature & pressure data
- Automatic T&P compensation
- Compression factor correction

DUAL POWER 4

Internal 3.6V Lithium Battery

External Power DC24V

Dual Power Supply

- Micro-power consumption <1mW, Battery work life 5 years

Flash Data Storage Technology

- Parameters long term preservation while power failure

5 MULTIPLE OUTPUT

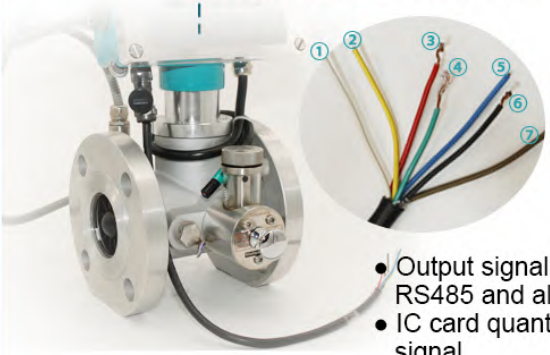

① Grounding
② RS485 A
③ DC24V+
④ 4-20mA+
⑤ Pulse
⑥ DC24V-
⑦ RS485 B

- Output signal: 4-20mA, pulse, RS485 and alarm
- IC card quantitative pulse signal

ALUMINUM ALLOY IMPELLER 6

- High strength, anti-corrosive
- Good anti-aging performance
- High accuracy, good repeatability

7

RECTIFIER STRUCTURE

- Wide flow ratio 1:40
- Ensure good accuracy under condition of upstream pipe 2D, downstream 1D

SPECIFIC OIL INJECTION STRUCTURE

8

- Easy oil filling operation
- Ensure bearings work smoothly

Main Technical Parameters

Nominal Diameter	DN50-DN400
Nominal Pressure	1.6Mpa/2.5Mpa/4.0Mpa
Range Ratio	Max 40:1 (under P=101.325Kpa,T=293.15K)
Accuracy	1.5% (Standard), 1.0% (Optional)
Repeatability	Better than 0.2%
Ex proof	ExiaIICT6Ga
Protection	IP65
Shell Material	Aluminum Alloy/Carbon Steel
Power Supply	3.6V Lithium Battery Powered External power DC18-30V
Output Signal	4-20mA,Pulse,Alarm
Communication	RS485 Modbus RTU

Model Selection

Model	QTWG	
DN	XX	XX--Nominal dia. Such as 100 standard DN100
Structure	M	Compact type
Output	I0	I0--Two wire current output
	IC	Ic-- IC card quantitative output
	QA	QA-- Flow alarm
	R4	R4--RS485
	R2	R2--RS232
	RM	RM --Standard MODBUS communication protocol
	RH	RH --Standard HART communication protocol
Converter	1	1--Without temperature and pressure compensation
	2	2--With temperature and pressure compensation
Power supply	0	0--External power 24—30VDC(two wire)
	1	1--External power 24—30VDC (Three wire)
	2	2--Lithium battery(3.6VDC)
Working pressure	P1	0.5MPa
	P2	1.0MPa
	P3	1.6MPa
	P4	2.5MPa
	P5	4.0MPa
Ex-proof	NE	Without Ex-proof
	EX	With Ex-proof

Dimension

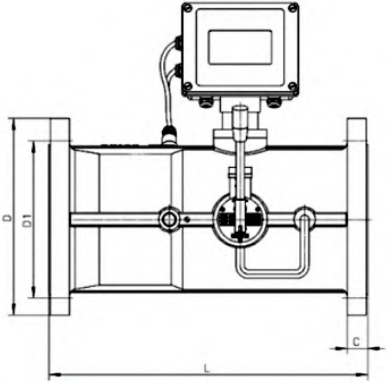

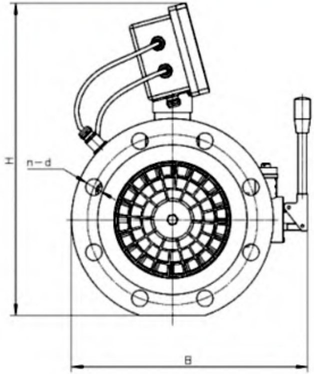

DN	L	D	D1	n-d	C	H	B
50(2″)	150	165	125	4-φ18	20	340	275
80(3″)	240	200	160	8-φ18	20	362	280
100(4″)	300	220	180	8-φ18	22	382	285
150(6″)	450	285	240	8-φ22	24	347	370
200(8″)	600	340	295	12-φ22	24	493	390
250(10″)	750	405	355	12-φ26	26	580	480
300(12″)	900	460	410	12-φ26	28	618	535
400(16″)	1200	580	525	16-φ30	32	743	665
Note	1.Flange: DIN PN16 2.The data is under 1.6Mpa 3.Unit:mm						

Flow Range

DN (mm/inch)	Model	Flow specification	Flow range (m3/h)	Qmin (m3/h)	Max.pressure loss (Kpa)	Shell material	Weight(kg)
50(2")	QTWG-50(A)	G40	6.5-65	≤ 1.3	0.9	≤1.6MPa Aluminum alloy >1.6MPa carbon steel	6.5
	QTWG-50(B)	G65	8-100	≤ 1.6	0.8		
	QTWG-50(C)	G100	10-160	≤ 2.4	2.0		
80(3")	QTWG-80(A)	G100	8-160	≤ 2.4	1.0		9.5
	QTWG-80(B)	G160	13-250	≤ 3.0	1.6		
	QTWG-80(C)	G250	20-400	≤ 5.0	2.0		
100(4")	QTWG-100(A)	G160	13-250	≤ 3.3	1.0		15
	QTWG-100(B)	G250	20-400	≤ 4.2	1.6		
	QTWG-100(C)	G400	32-650	≤ 6.7	1.8		
150(6")	QTWG-150(A)	G400	32-650	≤ 7.8	1.6		27
	QTWG-150(B)	G650	50-100	≤ 10	2.0		
	QTWG-150(C)	G1000	80-1600	≤ 12	2.3		
200(8")	QTWG-200(A)	G650	50-1000	≤ 13	1.6	Carbon steel	45
	QTWG-200(B)	G1000	80-1600	≤ 16	2.0		
	QTWG-200(C)	G1600	130-2500	≤ 20	2.2		
250(10")	QTWG-250(A)	G1000	80-1600	≤ 20	1.2		128
	QTWG-250(B)	G1600	130-2500	≤ 22	2.0		
	QTWG-250(C)	G2500	20-4000	≤ 25	2.3		
300(12")	QTWG-300(A)	G1600	130-2500	≤ 22	1.6		265
	QTWG-300(B)	G2500	200-4000	≤ 25	2.0		
	QTWG-300(C)	G4000	320-6500	≤ 35	2.3		
400(16")	QTWG-400(A)	G1600	300-2500	≤ 25	1.8		380
	QTWG-400(B)	G2500	500-4000	≤ 35	2.0		
	QTWG-400(c)	G4000	600-8000	≤ 40	2.3		

INSTALLATION

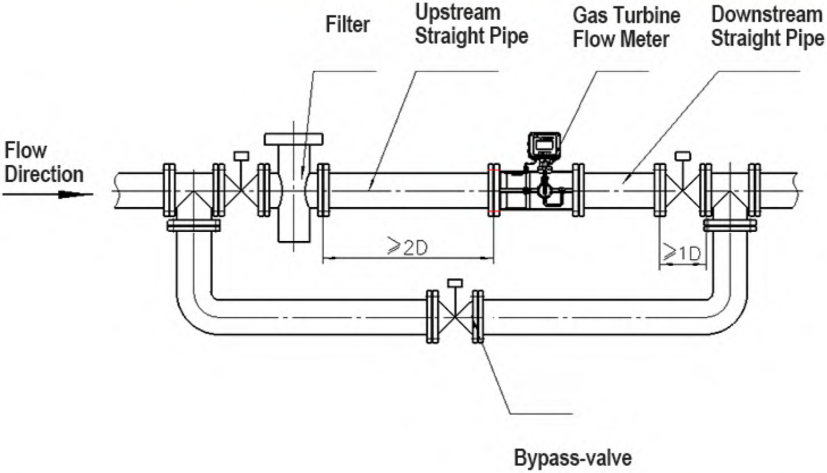

STRICT FLOW CALIBRATION

- Advanced DN15-300mm sonic nozzle gas flow calibration system

- Each flow meter is calibrated and attached with calibration certificate

CERTIFICATE

Professional Manufacture　　Quality Assurance

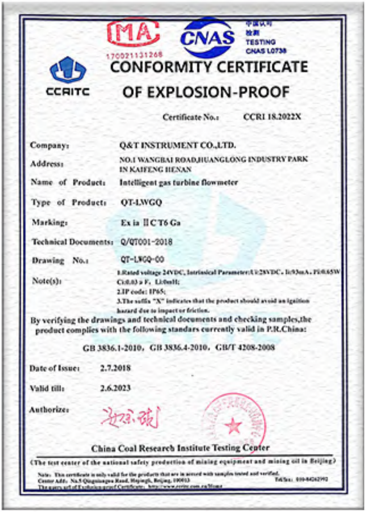

CMA 170021131268

CNAS
中国认可
检测
TESTING
CNAS L0738

CCRITC

CONFORMITY CERTIFICATE OF EXPLOSION-PROOF

Certificate No.: CCRI 18.2022X

Company:	Q&T INSTRUMENT CO.,LTD.
Address:	NO.1 WANGBAI ROAD,HUANGLONG INDUSTRY PARK IN KAIFENG HENAN
Name of Product:	Intelligent gas turbine flowmeter
Type of Product:	QT-LWGQ
Marking:	Ex ia ⅡC T6 Ga
Technical Documents:	Q/QT001-2018
Drawing No.:	QT-LWGQ-00
Note(s):	1.Rated voltage 24VDC, Intrinsical Parameter:Ui:28VDC、Ii:93mA、Pi:0.65W Ci:0.03 μF, Li:0mH; 2.IP code: IP65; 3.The suffix "X" indicates that the product should avoid an ignition hazard due to impact or friction.

By verifying the drawings and technical documents and checking samples,the product complies with the following standars currently valid in P.R.China:

GB 3836.1-2010, GB 3836.4-2010, GB/T 4208-2008

Date of Issue: 2.7.2018

Valid till: 2.6.2023

Authorize:

China Coal Research Institute Testing Center

(The test center of the national safety production of mining equipment and mining oil in Beijing)

Note: This certificate is only valid for the products that are in accord with samples tested and verified.
Center Add: No.5 Qingniangou Road, Hepingli, Beijing, 100013　Tel/fax: 010-84262992
The query url of Explosion-proof Certificate: http://www.ccritc.com.cn/Home

Gas Turbine Flow Meter Ex-proof

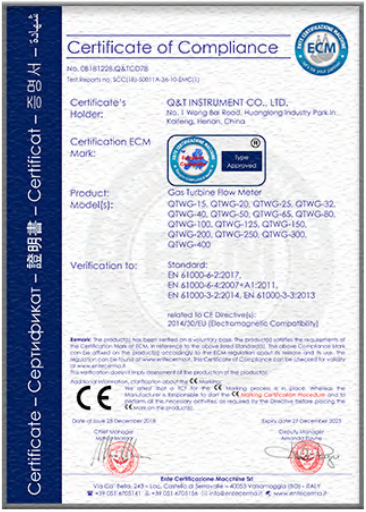

Certificate – Сертификат – 證明書 – 증명서 – Certificat – شهادة

Certificate of Compliance

ECM

No. 08181228.Q&TCD78
Test Reports no. SCC(18)-50011A-36-10-EMC(1)

Certificate's Holder:	Q&T INSTRUMENT CO., LTD. No. 1 Wang Bai Road, Huanglong Industry Park In Kaifeng, Henan, China
Certification ECM Mark:	European Conformity ® Type Approved
Product:	Gas Turbine Flow Meter
Model(s):	QTWG-15, QTWG-20, QTWG-25, QTWG-32, QTWG-40, QTWG-50, QTWG-65, QTWG-80, QTWG-100, QTWG-125, QTWG-150, QTWG-200, QTWG-250, QTWG-300, QTWG-400
Verification to:	Standard: EN 61000-6-2:2017, EN 61000-6-4:2007+A1:2011, EN 61000-3-2:2014, EN 61000-3-3:2013 related to CE Directive(s): 2014/30/EU (Electromagnetic Compatibility)

Remark: The product(s) has been verified on a voluntary basis. The product(s) satisfies the requirements of the Certification Mark of ECM, in reference to the above listed Standard(s). The above Compliance Mark can be affixed on the product(s) accordingly to the ECM regulation about its release and its use. The regulation can be found at www.entecerma.it. This Certificate of Compliance can be checked for validity at www.entecerma.it.
This verification doesn't imply assessment of the production of the product(s).

Additional information, clarification about the CE Marking:

CE

We attest that a TCF for the CE Marking process is in place. Whereas the Manufacturer is Responsible to start the CE Marking Certification Procedure and to perform all the necessary activities, as required by the Directive before placing the CE Mark on the product(s).

Date of issue 28 December 2018　　Expiry date 27 December 2023

Chief Manager
Mattia Moretti

Deputy Manager
Amanda Payne

Ente Certificazione Macchine Srl
Via Ca' Bella, 243 – Loc. Castello di Serravalle – 40053 Valsamoggia (BO) – ITALY
☎ +39 051 6705141　+39 051 6705156　info@entecerma.it　www.entecerma.it

Gas Turbine Flow Meter CE

德意志联邦共和国
商标注册证书
企业法人营业执照
Enterprise Certificates
IEP
CERTIFICATE OF REGISTRATI
CONFORMITY CERTIFICATE
OF EXPLOSION-PROOF
CERTIFICATE

More than 100 patents

Packing Of Products

Flowmeter
Flowmeter
Flowmeter
Flowmeter

From wrapping to packing, we take care of every process to ensure safe delivery.

Enter the finished product warehouse and wait for transportation

Trade Show

Rich experiences in exhibition

Q&T
PHILEMON
STCK