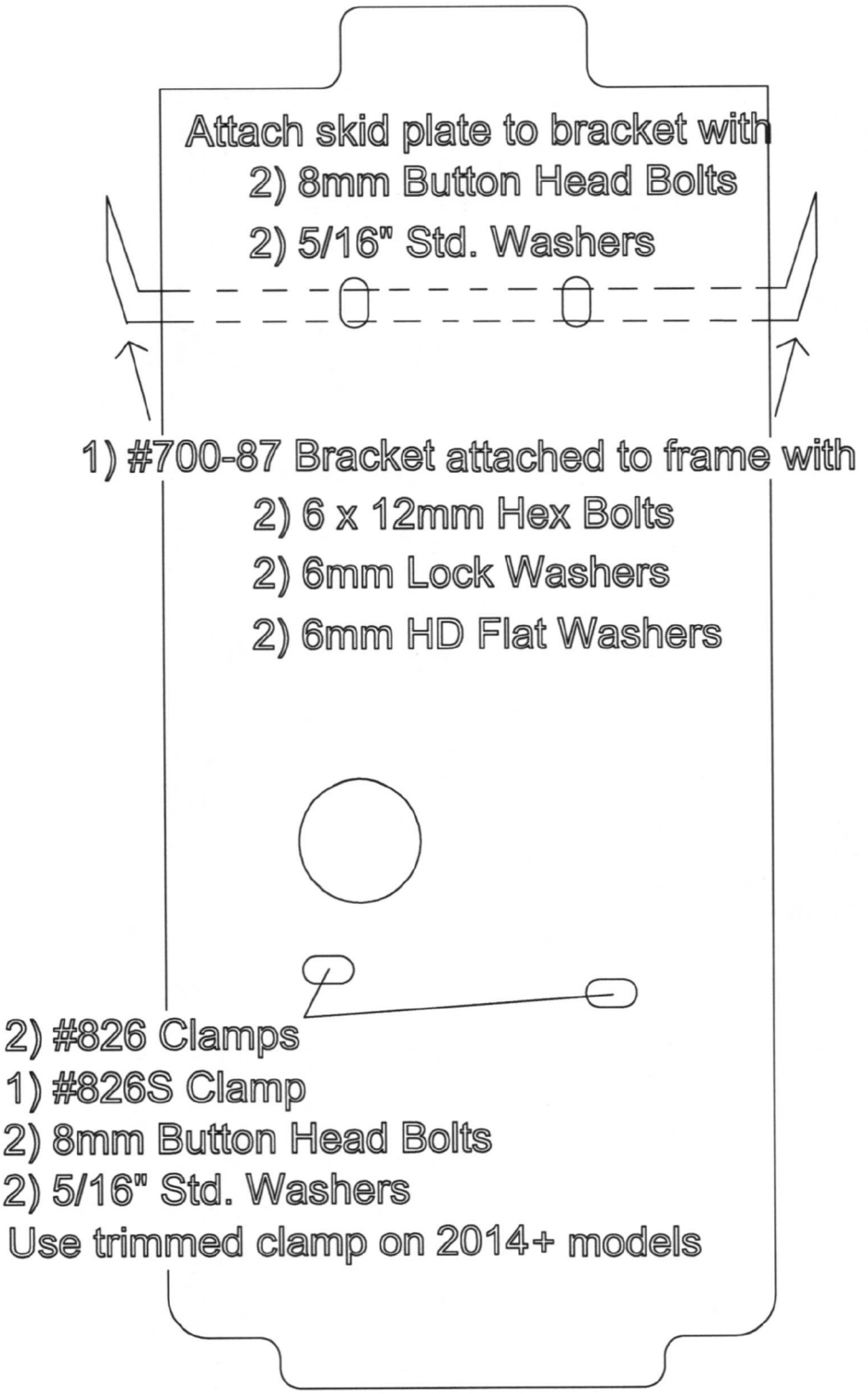
Attach skid plate to bracket with
2) 8mm Button Head Bolts
2) 5/16" Std. Washers
1) #700-87 Bracket attached to frame with
2) 6 x 12mm Hex Bolts
2) 6mm Lock Washers
2) 6mm HD Flat Washers
2) #826 Clamps
1) #826S Clamp
2) 8mm Button Head Bolts
2) 5/16" Std. Washers
Use trimmed clamp on 2014+ models

#287