www.franke.com

FRANKE

1

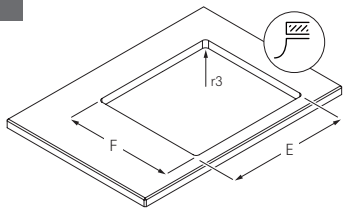

Model	E	F	r3
MYX 110 16	160	400	25
MYX 110 34	340	400	25
MYX 110 45	450	400	25
MYX 110 50	500	400	25
MYX 110 55	550	400	25

Model	E	F	r3
MYX 110 70	700	400	25
MYX 160 34-16	525	400	25
MYX 120 34-34	705	400	25
MYX 160 50-16	685	400	25

2

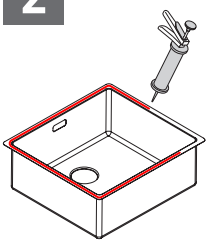

3

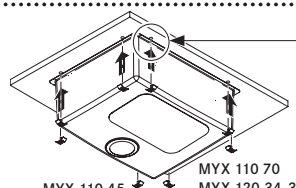

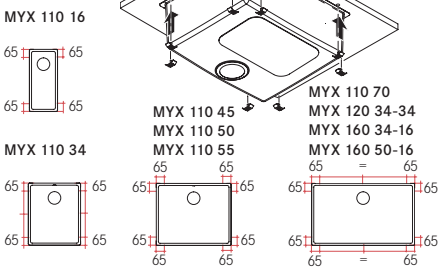

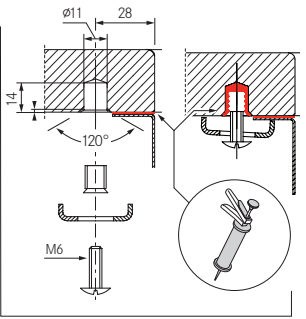

© Franke Technology and Trademark Ltd., Switzerland | 2020-03, V01 | 993.0618.391 | ID: 20172406