Icon Pull Out Jet Shower Matt Black | 115.0625.190

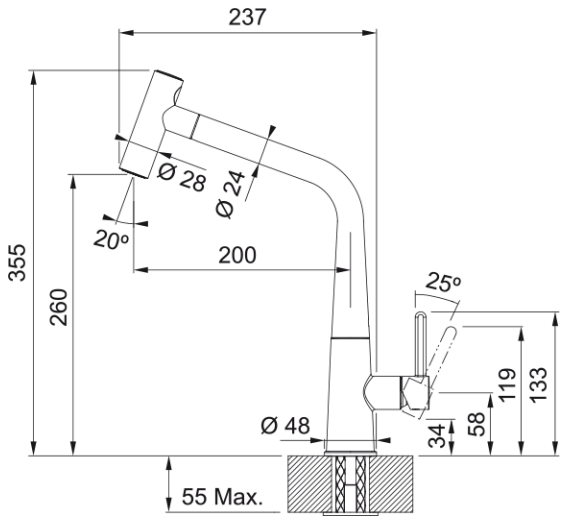

Combining contemporary design and wonderful features, Icon is the perfect balance of aesthetics and functionality.
Choose the Icon pull-out, with double jet shower and Neoperl Laminar aerator to reduce splashing. Or select the Icon swivel spout with front-on ergonomic control level, offering easy operation for busy or dirty hands.

Technical Data

Product Information	
Spout version	L - spout
Color	Matt Black
Type of material	Brass
Flexible pullout hose material	Nylon black
Shower material	Brass
Dimensions	
Tap hole diameter	35 mm
Cartridge dimension	25 mm
Installation	
Fixation type	Shank
Water supply hose connection	3/8"
Water supply hose length	450 mm
Product specifications	
Pressure	High pressure
Version	Spray
Tap operation	Side lever
Tap rotation	360°
Product Identification	
Product brand	FRANKE
Product family	Mythos
Model range	Icon
Properties	
Eco water saving	No
Type of aerator	Laminar