ENGWE

Electric Scooter S6
User Manual

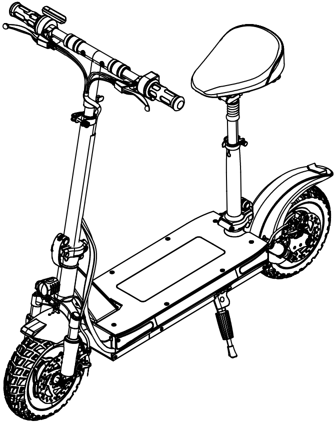

Contents

1.Safety instructions.................... 4

2. Packing list 6

3. Product function diagram........... 7

4. Charging 9

5. Folding and carrying 10

6. Maintenance 11

7. Specification........................... 12

8. Trademarks and legal notices 13

9. Warranty 14

1.Safety instructions

1. The electric scooter S6 is a product designed for personal urban transportation, which has the property of a means of transportation, and the safety risks which all means of transportation may have.

2. The Kick Scooter is a recreational product.Before mastering riding skills, you need to practice. Engwe is not responsible for any injuries or damage caused by a rider's inexperience or failure to follow the instructions in this document.

3. Before lending your scooter to someone else, make sure that they have read this manual, watched the instructional video, and earned novice instruction. You are responsible for ensuring the safety of new riders. Please assist him/her to learn to use this product until he/she learns the basic operation of this scooter. Please ensure that each new rider wears a helmet and other protective gear.

4. Follow the tips and warnings in this manual can reduce risks, but it cannot eliminate all risks. Please keep in mind that when you use a scooter, you may be at risk of injury or death due to loss of control, collision, and falls. The scooter is only suitable for thehard pavement above, it is recommended to use it in a relatively closed pavement environment (such as inside the community, parks, special venues, etc.) Do not pass through places with obstacles and contacts.When entering an unfamiliar environment, be vigilant and slow down.

5. In order to reduce the risk of injury,you must read and follow all"Caution"and "Warning" notices in this manual. Please do not over speed and do not on the motorway.

6. For the first riding, please do not choose areas where children, pedestrians, pets, vehicles, bicycles or other obstacles and potential hazards may appear.

7. Please respect the rights of pedestrians when riding.Avoid frightening pedestrians, especially the elderly, children, the disabled and pregnant women.When approaching pedestrians from the rear, remind pedestrians and slow down when passing. Please abide by local traffic laws and regulations.

8. When riding in countries and regions where there are no laws and regulations related to electric scooters, you must strictly abide by the safety requirements for cyclists in this manual. Engwe will not assume any responsibility for any property loss, personal injury,accident or legal disputes caused by the use behavior that violates the safety tips in this manual.

9. Before riding the scooter, please check and make sure there are no loose fasteners and damaged parts. If the scooter makes abnormal noise or alarm sound, please stop using it immediately and consult with your purchasing point or email to the manufacturer.

10. Please observe the road surface when riding, avoid obstacles and smooth ground (including but not limited to wet ground, loose sand, stone ground and surface, etc).

11. This product is suitable for users aged 14-60 years old and weighing less than 120kg.Please comply with the following safety tips:
A.Those who are not suitable for riding this scooter include:
i.People affected by alcohol or drugs.
ii.People unable to engage in vigorous physical activities due to illness.
iii.People who have trouble maintaining balance.
iv.People whose weight exceeds the prescribed limit (please refer to the instruction manual" Specification"). v.Pregnant woman.
B.Children need to ride scooters under adult supervision.
C.Please abide by the local laws and regulations while riding. Do not ride scooters in areas prohibited by the local law.
D.For a safe ride,you must ensure that you can see the area in front, and you could be seen by others.
E.The Scooter is not designed to ride when it is snowing, raining, slippery, muddy or icy. Do not ride a scooter across obstacles(sand,stones or roadblocks), which may cause a loss of balance or grip, and result in a fall.
F.Damages and losses due to water ingress are not covered by the warranty.
G.Please avoid riding at night.
H.Please do not suddenly accelerate or decelerate. Please do not drive at a speed exceeding the limit of the scooter, otherwise there may be a risk of runaway, collision and falling.

12. Please do not try to charge your scooter when the charging port, charger or power outlet is wet.

13. Make sure to use the original chargers from Engwe to charge the scooter.

14. Only use parts and accessories approved by Engwe.And do not modify your scooter.Modifications to the scooter may affect the operation of the scooter, resulting in serious injury damage and invalid warranty.

15. Children should not use scooters or play with scooter parts. When riding, the scooter body vibration will cause the driver's body vibration.

16. It is recommended to park on a flat and solid ground.If parking on a slope, the kick stand must face downhill to prevent overturning. Do not allow the scooter head to rush down to prevent the kick-stand support from closing under gravity and the vehicle toppling over. After putting down the kick-stand, please check whether the scooter body is stable and prevent the scooter(from sliding, wind or shaking) from tipping over. Do not park in busy areas. It is recommended to park near the wall. Please park the scooter on a flat road as much as possible.

17. In order to get a better driving experience, it is recommended to maintain the product regularly.

18. Please read the user manual before charging.

19. Do not touch the brake parts of the scooter,, injury may occur.

2. Packing list

Assembled KickScooter

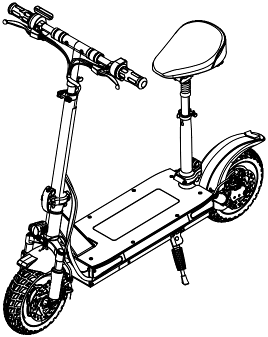

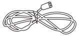

Power cable

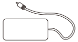

Power adapter

User Materials

User Manual

Please carefully check whether the items in the packing box are complete and intact. If there is any part missing or damaged, please contact your point of purchase or email to manufacturer
Please retain the box and packaging materials at least 15 days in case you need to ship your Kick Scooter in the future.

3. Product function diagram

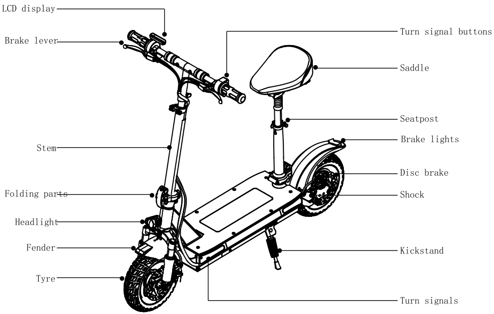

Dashboard & power switch

Power switch: To turn on the power of the vehicle, turn the key to the right after inserting the key into the keyhole.

Dashboard: Displays the current driving speed of the E-scooter. When the scooter fails, the dashboard displays the fault code.

Speed mode: Three modes, the maximum speed is shown in the table below.

Speed	Mode
mode 1	0-15km/h
mode 2	16-30km/h
mode 3	30-42km/h

Power display: a total of five cells, each cell represents about 20% power. When the grid flashes, it means the power is very low at this time, please charge in time.

Fault display: Error indicates that a fault occurs, and the instrument displays the fault code. In this case, please contact the after-sales service for repair.

Error=1	Failure of motor
Error=2	Failure of instrument
Error=3	Brake failure
Error=4	Controller failure
Error=5	Turn handle fault
Error=9	Timeout of communication

4. Charging

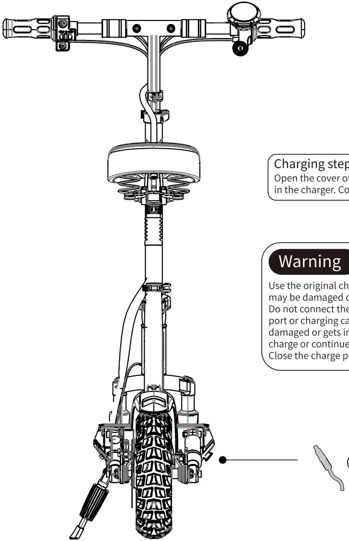

Charging step tips:

Open the cover of charging ports and plug in the charger. Cover back after charging.

Warning ⚠

Use the original charger, otherwise the battery may be damaged or cause danger!

Do not connect the charger when the charging port or charging cable is wet! If the battery is damaged or gets into water, it is forbidden to charge or continue to use the battery!

Close the charge port cover when not charging.

5. Folding and carrying

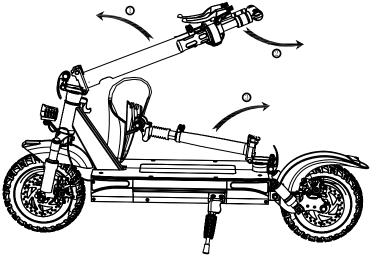

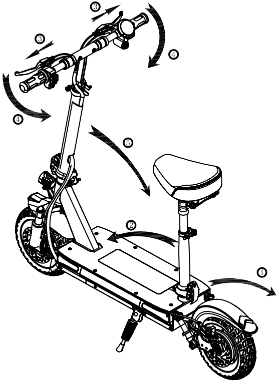

6.Maintenance

Cleaning

Use a soft, wet cloth to wipe the mainframe clean.Dirt hard to remove can be scrubbed with a toothbrush and toothpaste, then cleaned with a soft, wet cloth.

Warning

Do not use alcohol, gasoline, kerosene, or other corrosive, volatile solvents to clean your scooter. These substances may damage the appearance and internal structure of the body of scooter. It is forbidden to spray the scooter with a pressure water-gun or water pipe. Before cleaning, make sure the scooter is powered off, and the charging cable has been unplugged and the rubber cover of the charging port has been fastened.Otherwise it may cause damage to electronic components or the battery.

Storage

When the scooter is not in use, please place it in a bright and dry place.Do not park the scooter outdoors. Sun exposure or extreme temperature conditions(overheating and too cold) will accelerate the aging of plastic parts and may lead to a reduction in battery life.

Battery dis-assembly and maintenance

Do not use batteries made by 3rd parties without authorization, otherwise there may be safety risks. Do not store or charge the battery at temperatures outside the stated limits (see Specifications).

Do not touch the battery contacts,and do not dis-assemble or pierce the case of the battery.Avoid the short circuit caused by metal objects touching the battery contacts, otherwise it may cause battery damage or even personal injury.

t is forbidden to put the battery into fire, otherwise it may cause the battery to fail, overheat, or even risk of fire. Do not charge or use your battery if it is damaged or seeing trace of water.

Please do not try to dis-assemble the battery, otherwise there is a risk of fire. Users are not allowed to repair the parts contained in this scooter by themselves, without authorization.

Do not ride the scooter at temperatures outside the stated limits (see Specifications), because the power of the motor will be limited, which may cause slip, and falling.

The Improper disposal to used batteries may seriously pollute the environment. Please comply with the local regulations when disposing of the battery.Do not discard this battery as one desires.

Note

The battery in good condition can maintain a good operating state even after driving for many miles. Please re-charge

the battery on time, to avoid the battery is completely draining.At the indoor temperature 22°C, the battery has the best battery life and performance, While, at the temperatures under O°C, the battery life and performance may degrade.

Generally, the range of the same battery at-20°C is only half of 22°C.When the temperature rises, the range will recover. Typically, a fully charged battery should retain power for 120- 180 days.A low-power battery should retain power for30-60 days.Remember to charge the battery after each use. Completely draining the battery may cause permanent damage to the battery. Electronics inside the battery record the charge-discharge condition of the battery; damage caused by over-charging or under-charging will not be covered by the Limited Warranty.

7. Specification

Dimension	Unfold	1155mmx600mm×1160mm
	Fold	1155mmx250mmx525mm
Weight	Net Weight	26.4kg
Recommendation	Top speed	46km/h
	Range (1)	~70km
	For height of	130~200cm
	Max. of load	120kg
	For age of	14-60 years old
	Max. of slope	13%
	Working temperature	~10°C~40°C
	Storage temperature	~20°C-45°C
	IP rating	IPX4
	Charging time	~6h
	Rating voltage	48V
	Charging temperature	0°C~40°C
	Capacity	15.6AH
Motor	Motor power	500W
Charger	Input voltage	180-240V AC
	Output voltage	54.6V
	Output current	3A
Tire	Tire	10"x2.75 Tubeless tire

8.Trademarks and legal notices

ENGWE is a registered trademark of ENGWE Technologies Co., Ltd.;Android is a trademark of Google; App Store is a sign of Apple service; other trademarks mentioned in this article belong to their owners.

When printing this manual, it has included as many function introduc-tions and instructions as possible. However, due to the continuous improvement of product functions and design changes, it may still be inconsistent with the product you purchased.Respect. Due to product updates,the actual product may deviate with the color and appearance mentioned in this manual. Please refer to the actual product.

All rights reserved by ENGWE Technologies Co., Ltd.

Manufacturer: ENGWE Technologies Co., Ltd.

The more familiar you are with scooter, the more safety you will get on riding. suggest you to:

1. Read this user manual carefully before riding.
2. Do not allow other people to ride this scooter before they read this manual carefully.
3. Please read this manual carefully. All the components of the scooter must be correctly installed according to the instructions, meanwhile, make sure the installation is not too loose or too tight, to avoid damage or failure.
4. To minimize the risk, please purchase insurance in time after purchasing the product.
5. Before riding, please check the installation status, wheel performance and battery status according to the instructions in the manual. Mark sure the scooter is a proper status, no signs of loosening or damage on any parts. If there are any signs of abnormality, please stop riding it immediately and contact the after-sales for checking and guidance.
6. You are obliged to know all relevant laws, regulations and policies regarding riding scooters in your area, and strictly comply with applicable laws, regulations and policies.
7. The data and parameters of the scooter will be varied with different models. It may be subject to change without notice.
8. To the extent permitted by the law, ENGWE reserves the right to interpret and explain this statement.This statement is applied by the laws of the People's Republic of China. ENGWE will not be liable for compensation for the cause of reimbursing the misuse of the product.With compensation , liability and loss, ENGWE will not be liable for compensation. Riders shall bear their own responsibility for unforeseen or occurring risks encountered on riding.

Thank you again for your choice and trust in ENGWE.

9. Warranty

Thank you for purchasing ENGWE products. Please consult the warranty policy with your purchasing point. In case of any assistance needed, please email to us.

FCC Statement

This equipment has been tested and found to comply with the limits for a Class B digital device, pursuant to part 15 of the FCC Rules. These limits are designed to provide reasonable protection against harmful interference in a residential

installation. This equipment generates, uses and can

radiate radio frequency energy and, if not installed and used in accordance with the instructions, may cause harmful interference to radio communica-tions. However, there is no guarantee that interference will not occur in a particular

installation. If this equipment does cause harmful interference to radio or television reception, which can be determined by turning the equipment off and on, the user is encouraged to try to correct the interference by one or more of the following

measures:

- Reorient or relocate the receiving antenna.
- Increase the separation between the equipment and receiver.
- Connect the equipment into an outlet on a circuit different from that to which the receiver is connected.
- Consult the dealer or an experienced radio/TV technician for help.

This device complies with part 15 of the FCC Rules. Operation is subject to the following two conditions:(1) This device may not cause harmful interference, and (2) this device must accept any interference received, including interference that may cause undesired operation.Radiation Exposure Statement This equipment complies with FCC radiation exposure limits set forth for an uncontrolled environment. This transmitter must not be co-located or operating in conjunction with any other antenna or transmitter.

This equipment should be installed and operated with a minimum distance 20cm between the radiator & your body.