RUPES

LUCIDATRICE ROTOECCENTRICA
GEAR DRIVEN POLISHER

LK900E

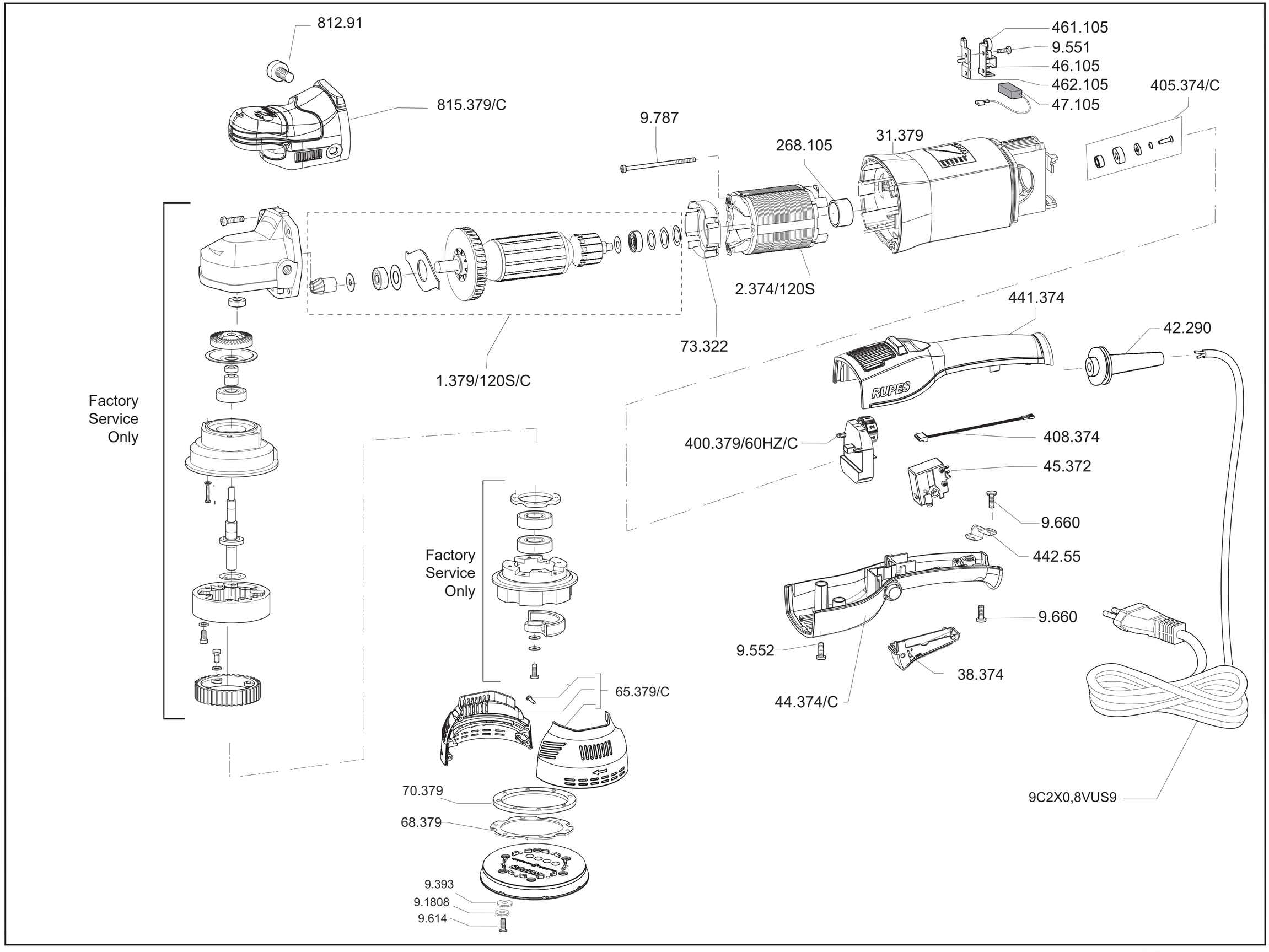

REV 2019.05.02