Architectural Door Accessories

ASSA ABLOY
Opening Solutions

Rockwood 910 & 911 Adjustable Ball Catch

Experience a safer and more open world

For Installation Assistance, Call Rockwood Products at 800-458-2424 • www.assaabloydooraccessories.us

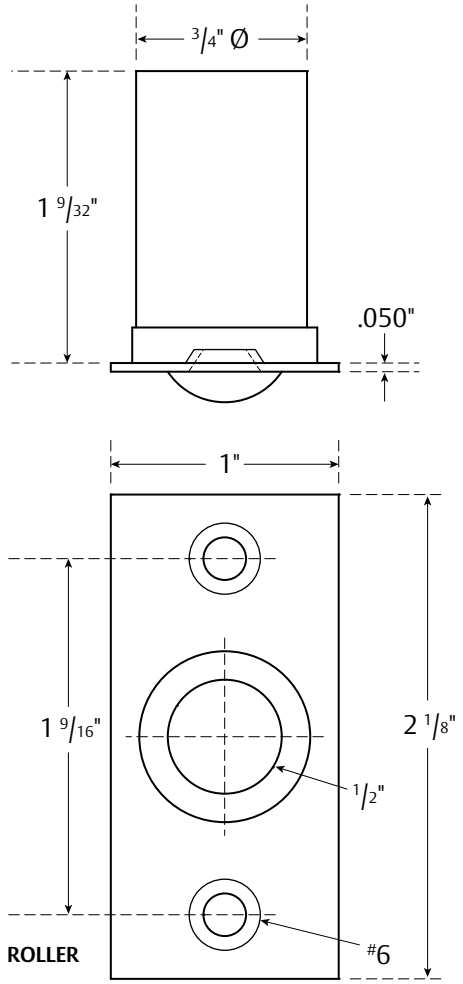

Wood Door/Wood Frame Prep Only

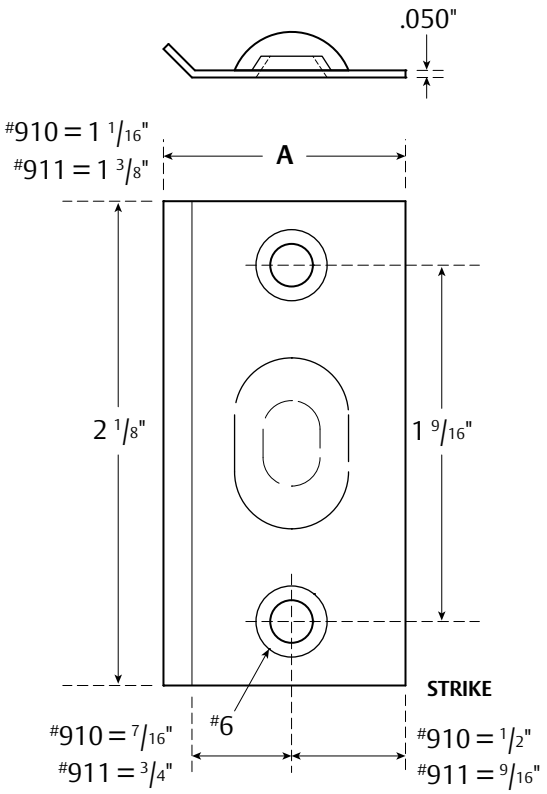

Fasteners Included: 4 ea. #6 x 3/4" Flat Head Sheet Metal Screws

Installation Instructions

#**910** (Designed for cabinet doors)
1. Mortise edge of door and center strike on door edge. Mount to door edge with #6 screws.
2. Find corresponding center for latch on frame and drill Ø 3/4" hole x 1 3/8" dp. Mortise frame and mount with #6 screws.

#**911** (Designed for 1 3/8" doors)
1. Find center of door width and drill Ø 3/4" hole x 1 3/8" dp. Mortise edge of door and install with #6 screws.
2. Measure 11/16" from edge of frame to locate strike screw mounting. Mortise frame and mount with #6 screws.

* If used on 1 3/4" door do not center roller on door. The roller needs to be 11/16" from the edge of the door engaging with the strike to the centerline of the prep to line up and engage the strike.

NOT TO SCALE

ASSA ABLOY Opening Solutions
Architectural Accessories Group
Rockwood, PA
P: 800.458.2424 • F: 800.922.9212
www.assaabloydooraccessories.us

Copyright © 2017-2021, ASSA ABLOY Accessories and Door Controls Group, Inc. All rights reserved. Reproduction in whole or in part without the express written permission of ASSA ABLOY Accessories and Door Controls Group, Inc. is prohibited.