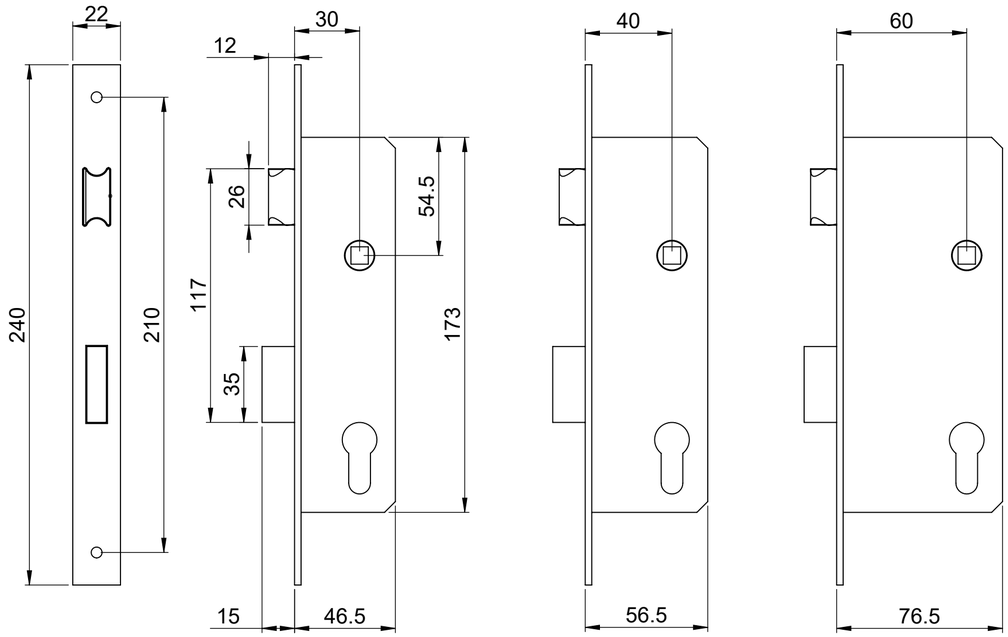

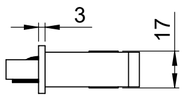

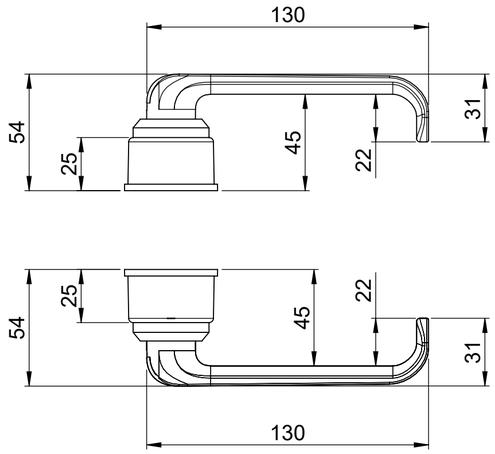

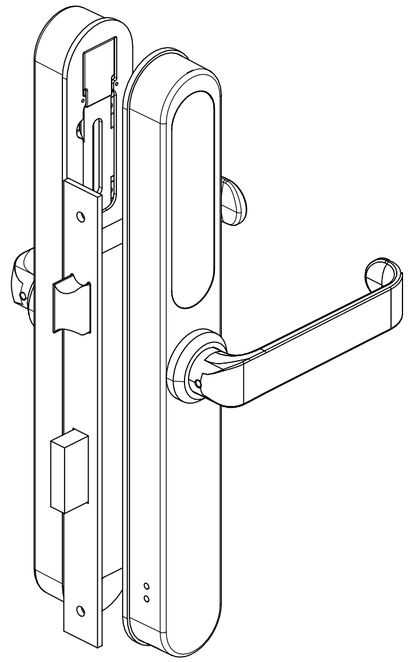

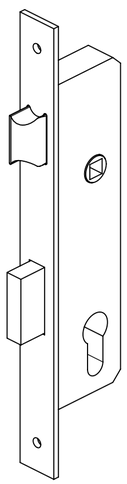

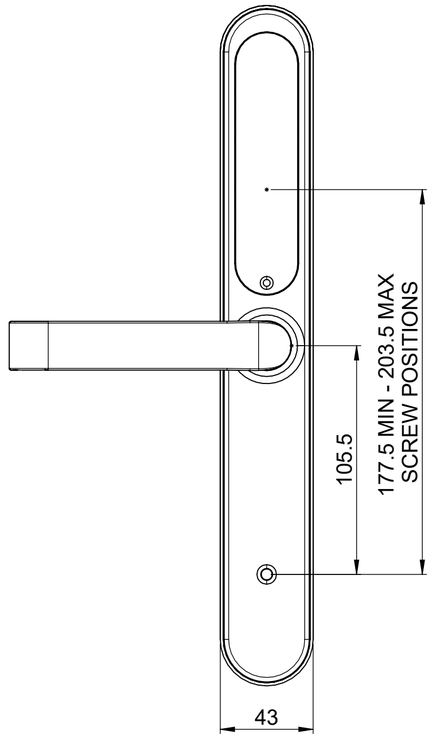

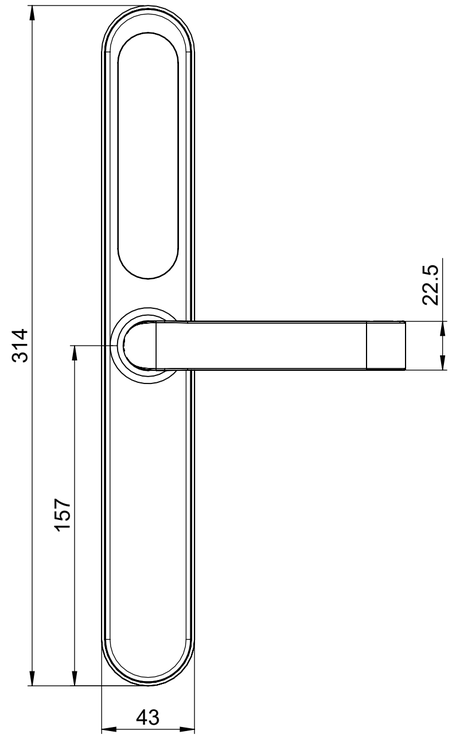

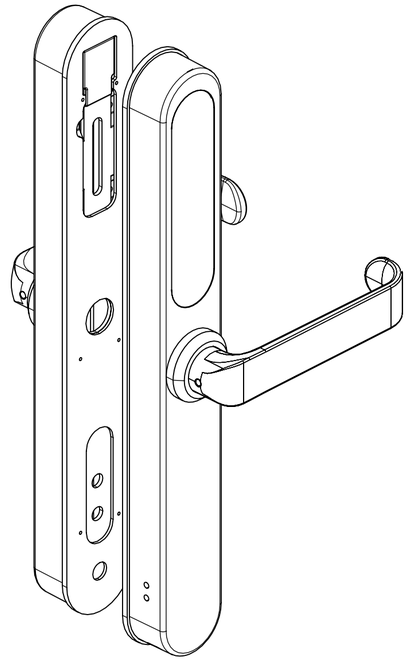

SCHLAGE

ARTUS NARROW PROFILE SMART LOCK

ALLEGION™

ALLEGION (NEW ZEALAND) LTD
COPYRIGHT@2023 ALL RIGHTS RESERVED
SCALE 1:2

SREART-DRW-A