Stella

TWIN SHOWER

Features

- Polished chrome finish
- Top or bottom integrated water inlet and diverter option
- WELS 3 Star rated, 9L/min

Rail:

- Made from stainless steel
- Rail thickness: 25mm
- 1.5 metre stainless steel flexible hose

Overhead Shower:

- Slim 250 mm diameter
- Made from stainless steel
- Brass swivel joint

Multifunction Hand Piece:

- Five water-flow settings
- Made from ABS

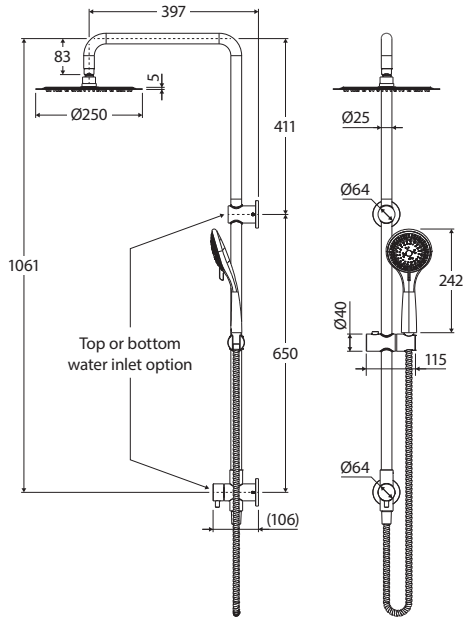

Available in

Chrome
455106

Cleaning & Care

- Regularly clean with mild soapy water using a microfibre cloth.
- In highly polluted or coastal locations, we recommend cleaning 2-3 times per week.
- Do not use harsh detergents, bleach, cream cleaners or citrus based cleaners. These substances are abrasive and will damage the surface.
- Do not use undue pressure and wipe in one direction only.

WaterMark

The more stars the more water efficient
WATER RATING
www.waterrating.gov.au
9.0 litres per minute
In accordance with AS/NZS 6400
Licence No. 0252
Fienza

While we aim to ensure specifications are correct at the time of publication, Fienza reserves the right to make modifications without prior notice. Physical colour may vary from image shown.
All measurements are shown in millimetres. Always use physical product measurements for mark-ups and roughing-in as the technical drawing may differ from actual product received.