EICHHOLTZ

Assembly instruction

Item type
Chandelier

Item name
Summit

Item no
110444UL

Attention! Do not connect your luminaire to electricity until it is fully assembled.

Care instructions:
Wipe with a soft dry cloth, do not use chemicals or abrasive cleaning materials.

Eichholtz B.V.
Delfweg 52
2211 VN Noordwijkerhout
The Netherlands

www.eichholtz.com
service@eichholtz.com
+31 (0)252 515 850

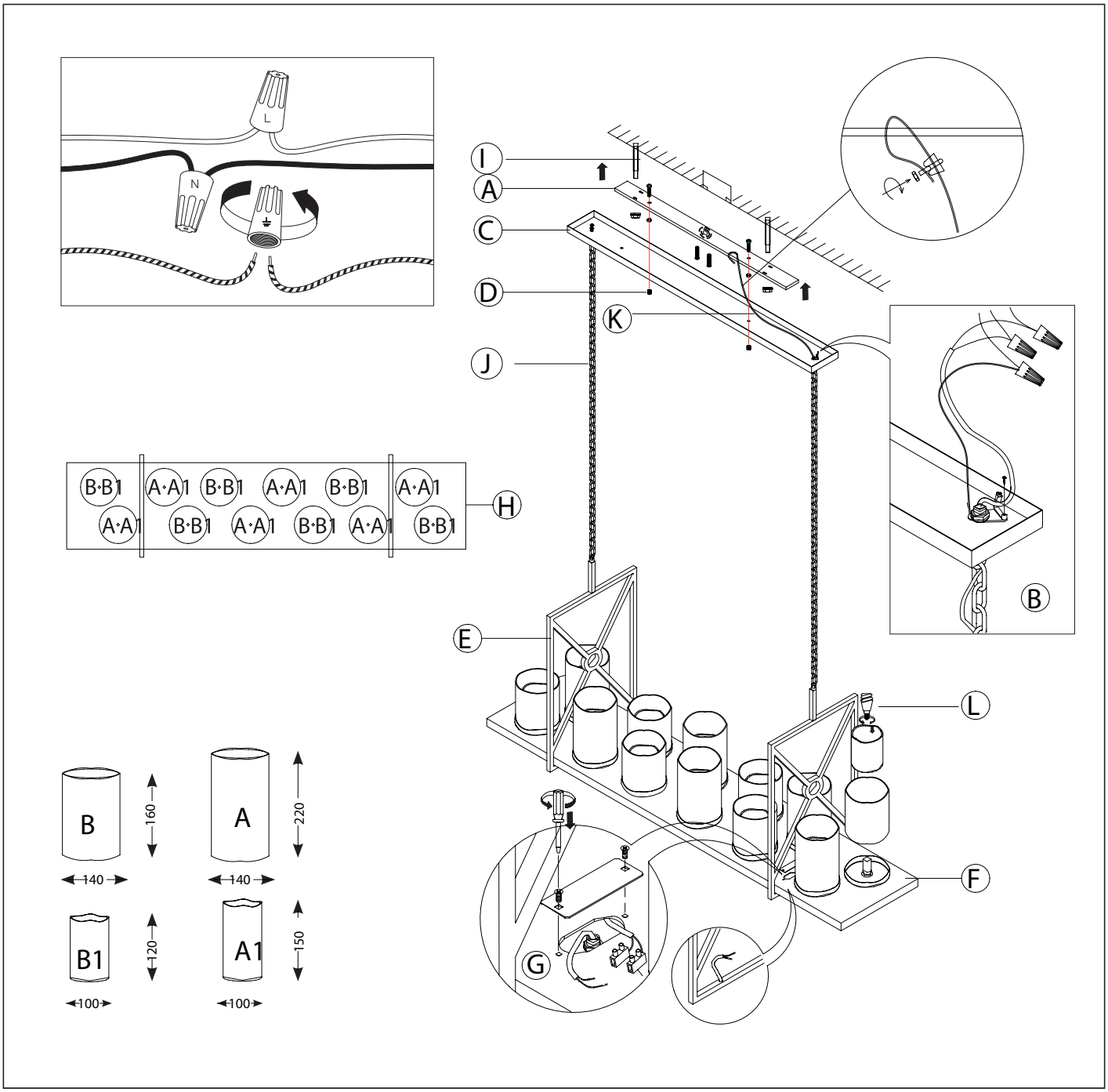

1. Take the side panels(E) and the luminaire (F) from the carton. Slide the side panels over the luminaire until they fall into place while leading the wires from the side panel through the bottom of the luminaire to the top. Now connect the wires from the side panel and the wire from the luminaire and place the connection inside the luminaire(G). Close the hole with the supplied cap.

2. Fix the crossbar by bolts(I) and screws. F

3. Fix the steel wire to the crossbar with the wire lock.

4. Connect the 3 wires. L is the live wire, N is the neutral wire, the coarse wire is the earth wire.

5. Place the canopy over the crossbar and fix it with the nuts.

6. Place the bulbs and white shades according to their sizes.