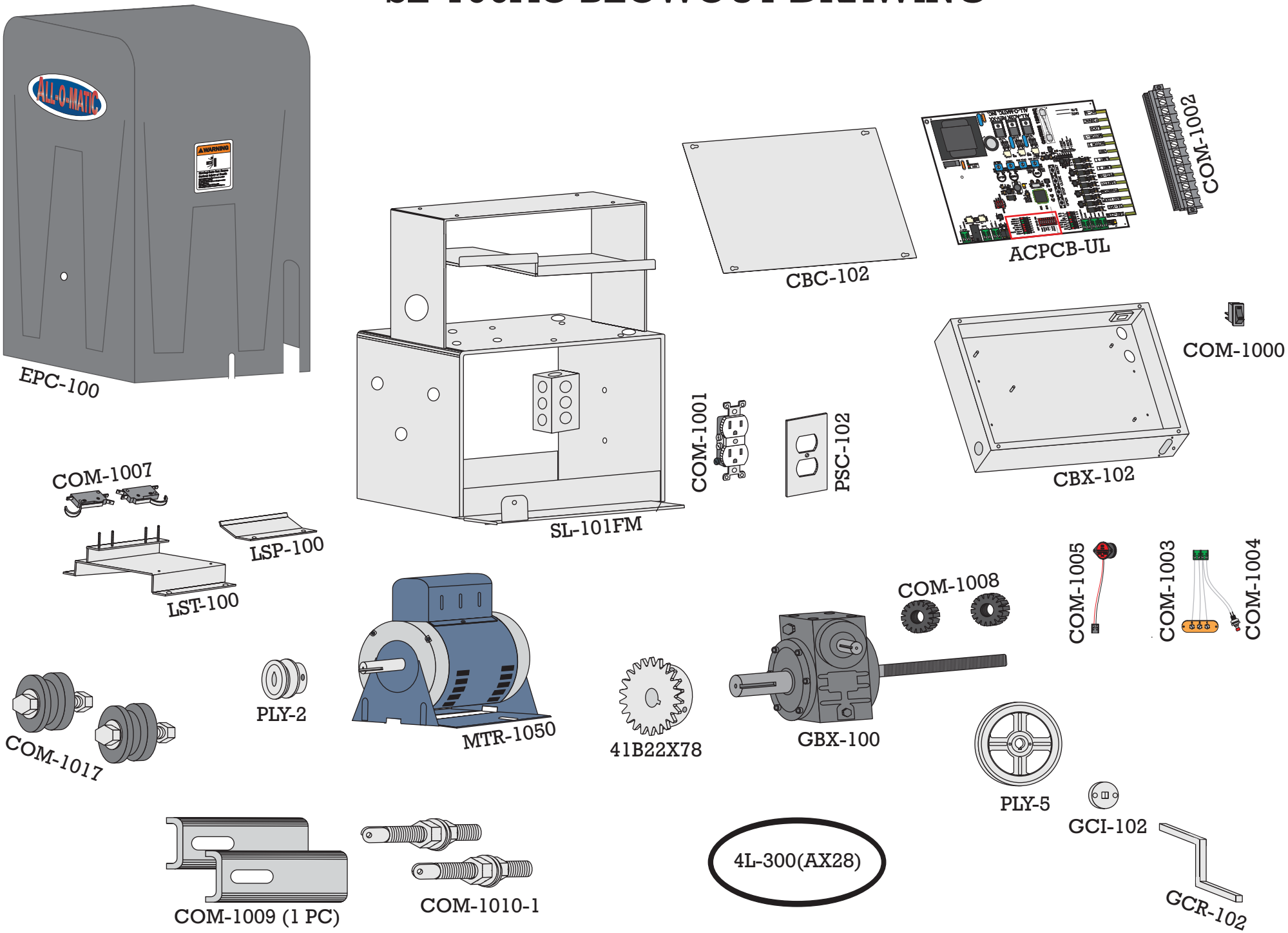# SL-100AC BLOWOUT DRAWING