PENSKE
RACING SHOCKS
UK

SPA TECHNIQUE UK

8900 Series Motorbike Damper

Technical Manual

E-mail: sales@penskeshocks.co.uk
Tel: 01543 434 580
Penske Racing Shocks-The Mill House, Packington Hayes, Litchfield, Staffordshire WS14 9PN

8900 Series Motorcycle Damper

Technical Manual

Introduction

Thank you for choosing Penske Racing Shocks for your suspension needs!
Every Penske Racing Shock is 100% hand built and dyno tested for the best performance and customer satisfaction. We stand by our products and routinely assist customers in getting the best performance from their shocks. The same components in the 8975 are used all over the world at the highest forms of Motorsport

This manual will give a guide to setting up your PS- 8900 series damper, with their wide range of customizable build specs this manual covers,

- **8900E** emulsion variation
- **8975** variation is Single or Double Adjustable.
- **8983** variation is Double Adjustable.
- **8987** variation is the Triple Adjustable

Contents

Terminology

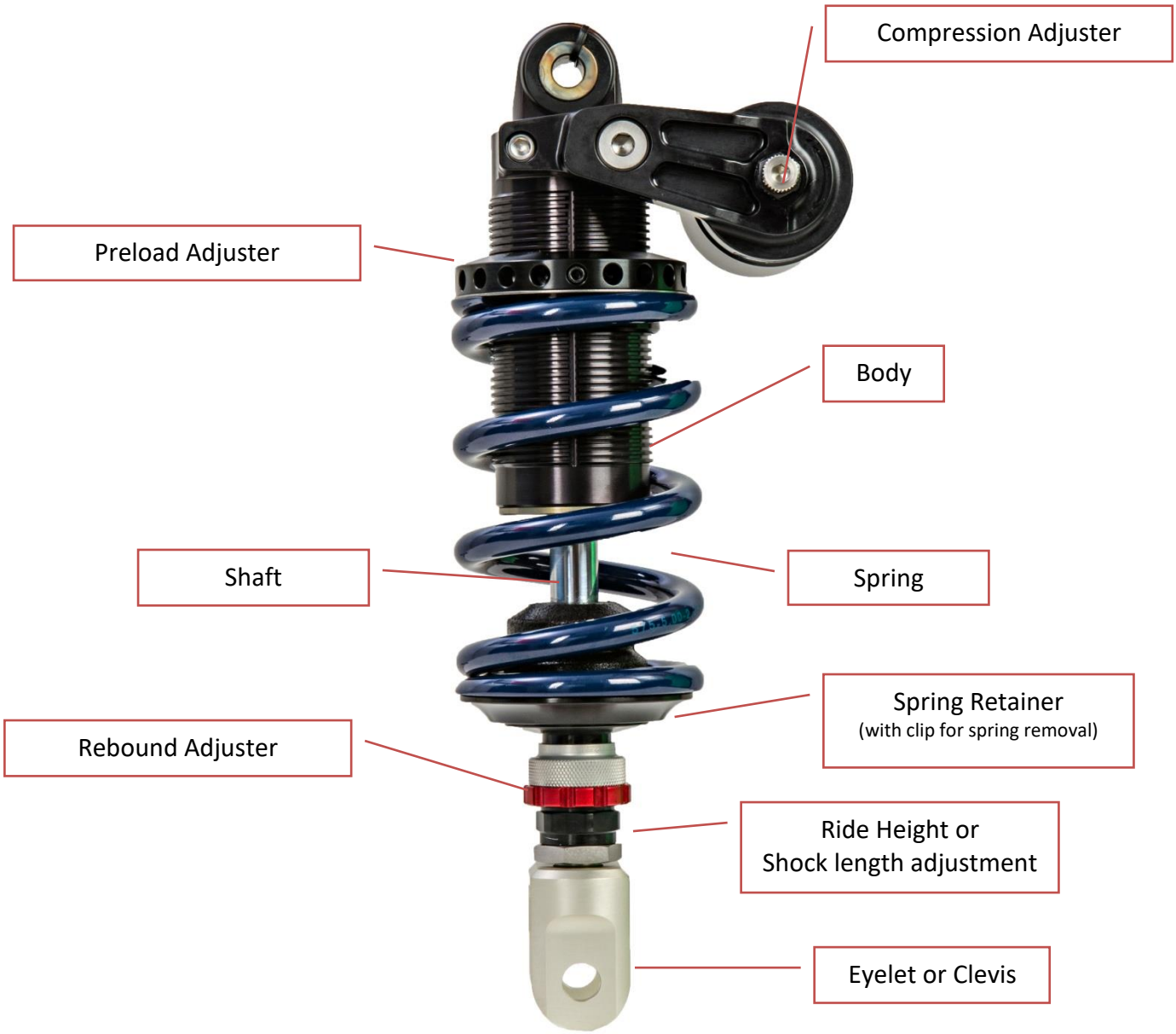

Setting Spring Preload

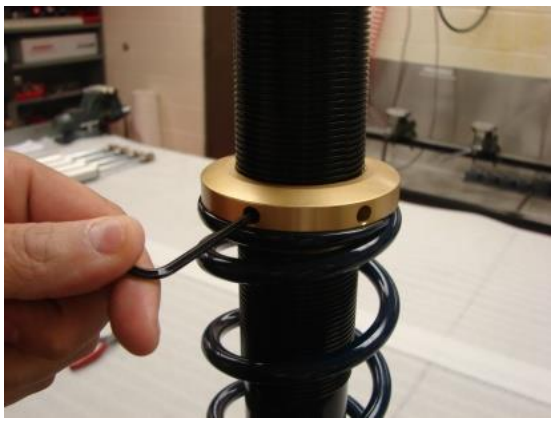

The adjuster (gold or black with holes) is located on the top of the main spring. The adjuster is threaded and moves up and down the body of the shock compressing or releasing the spring pre-load. You will need a 3mm Allen Key to unlock and lock the adjuster when adjusting preload.

Preload Adjuster Tool: We have supplied you with a preload adjuster tool (steel pin with an angled head). In order to use this tool properly put the smaller angled tip into the hole of the adjuster and grip the longer part of the tool with your hand.

The shock should currently be set to a preload based on the personal information you gave us about your riding. A good baseline setting is .500" (1/2" or 12mm) of preload. What does that mean: If the spring is 5" (127mm) in total length with .500" (12mm) of preload the spring should measure about 4.500" (115mm) compressed.

To adjust the spring Stiffer you would turn the spring down the body (tighter). This motion would be normally from Right to Left (similar motion to tightening most applications). In reverse, to adjust the spring Softer you would turn the spring up the body (looser). This motion would normally be from Left to Right.

Approximately One (1) turn of the spring is equal to .150" (3-4mm) of preload. If your 5" (127mm) spring was set with .500" (12mm) preload and you turned the spring down (Stiffer) two complete turns the total length of the spring should measure 4.300" (110mm). In reverse if you turned the spring up (Softer) two complete turns it should measure 4.700" (119mm).

A tip: Mark the Preload Adjustment Collar with some paint or something so you can tell one complete turn. A sharpie will work too.
Check out our video on "how to change a spring" it will also explain how to set preload:
http://www.youtube.com/watch?v=vxn34K7An3o

Setting the Sag of the Shock

STEP 1

1) Without a rider on the bike, have an assistant lift the rear of the motorcycle until the rear wheel is off the ground slightly.

2) Using a tape measure, measure the distance between the axle centre line and a convenient location on the rear subframe.

3) Record this measurement as "A". Your Bike:_____

STEP 2

1) One person should hold the front of the motorcycle, straddling the front tire.

2) Measure the distance between the axle centre line and a convenient location on the rear subframe (same locations used in Step 1).

3) Record this measurement as "B". Your Bike:_____

STEP 3

1) One person should hold the front of the motorcycle, straddling the front tire.

2) Have the rider, wearing all of their gear, sit on the bike in a tuck position.

3) The third person should then measure the distance between the axle centre line and a convenient location on the rear subframe (same locations used in Step 1).

4) Record this measurement as "C". Your Bike:_____

STEP 4

1) Subtract "B" from "A". This number is your static sag or free sag.

Target: 6mm - 12mm Free Sag Your Free Sag:_____

2) Subtract "C" from "A". This number is your rider sag.

Target: 22mm – 35mm Rider Sag Your Rider Sag:_____

When the rider sag is set correctly the bike will be more properly balanced with the suspension working together to provide a better ride. It also ensures that the correct geometry is maintained while riding, allowing proper steering and handling. On most sport bikes the sag needs to be less for proper handling and grip.

Roadrace Bike: 25mm-30mm Rider Sag and 6mm-11mm Free Sag

Trackday or Street Sport bike: 28mm-35mm and 8mm-12mm Free Sag

Naked Street bike: 32mm – 38mm and 10mm-14mm Free Sag

Touring and Adventure bikes are designed to be ridden with about 30% of the overall travel used when the rider and/or luggage are added to the bike. An appropriate sag setting will allow your motorcycle to have 70% of its suspension travel available to absorb bumps and stay connected to the road.

Touring Bike: 38mm – 45mm (30% of travel in rider sag)

Sport Adventure – 55mm - 65mm (30% of travel in rider sag)

Ride Height Adjustment

Steps

1) Loosen the jam nut with 27mm and 25mm Spanner.

2) Adjust the eyelet length (shorter or longer). See #2 below.

3) Tighten the jam nut. See #3 below

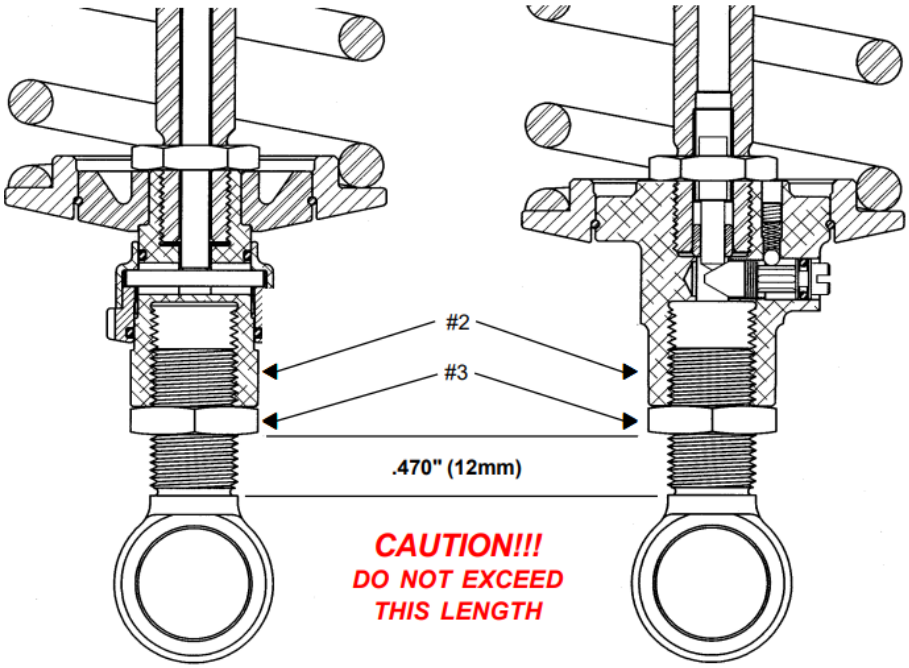

Ride Height Affects

Longer Rear shock Length Eye to Eye

1. Raise the rear ride height.
2. Transfer weight from the rear wheel to the front wheel.
3. Make the front turn in quicker.
4. Reduce chain torque to the rear wheel.

Shorter Rear shock Length Eye to Eye

1. Lower the rear ride height.
2. Transfer more weight to the rear wheel.
3. Make the front turn in slower.
4. Increase chain torque to the rear wheel.

Dyno Graph Overview

When you receive a dyno sheet, it will display your damping curve in “Full Stiff”, “Full Soft”, and shipped settings “Base Line”. You will notice the (-) before the setting; this identifies how many clicks off of full hard the adjuster was set to achieve this curve.
Typically the graph will have a “COMP” for compression and “REB” for rebound before the setting. For 3-Way dampers Comp will be split into “LSC” Low speed Compression and “HSC” High Speed Compression. High speed will have a how many clicks off of full soft.

Blow the graph show force against velocity average, this give a good general view of shocks performance. The top section represents Compression and how lower negative section represents rebound.

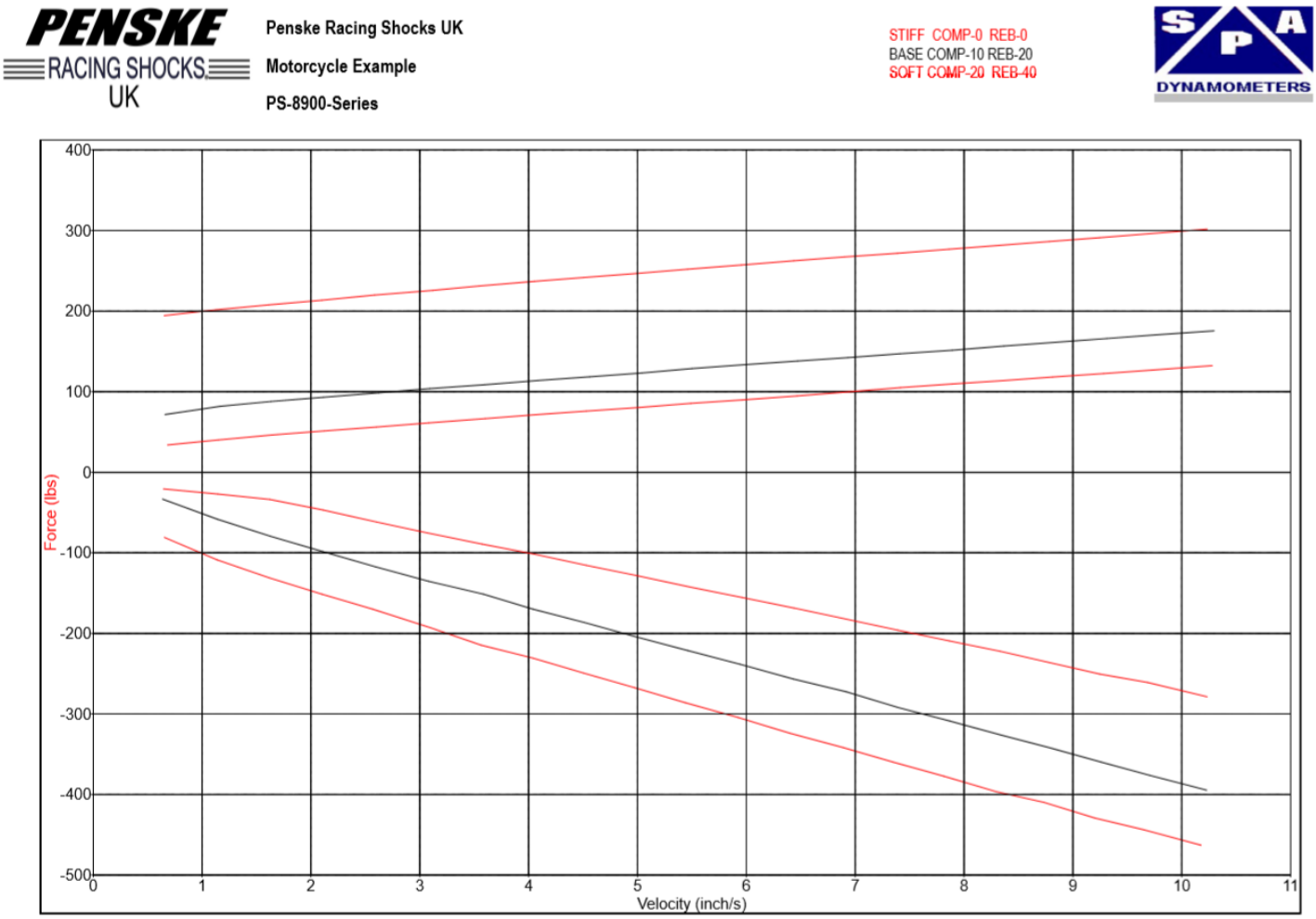

Address: Penske Racing Shocks-The Mill House, Packington Hayes, Litchfield, Staffordshire. WS14 9PN
E-mail: sales@penskeshocks.co.uk
Tel: 01543 434 580

Note: Remember that low speed damping characteristics are controlled by bleed through the low speed adjuster (8976) and the bleed hole in the piston, not the valve stacks.

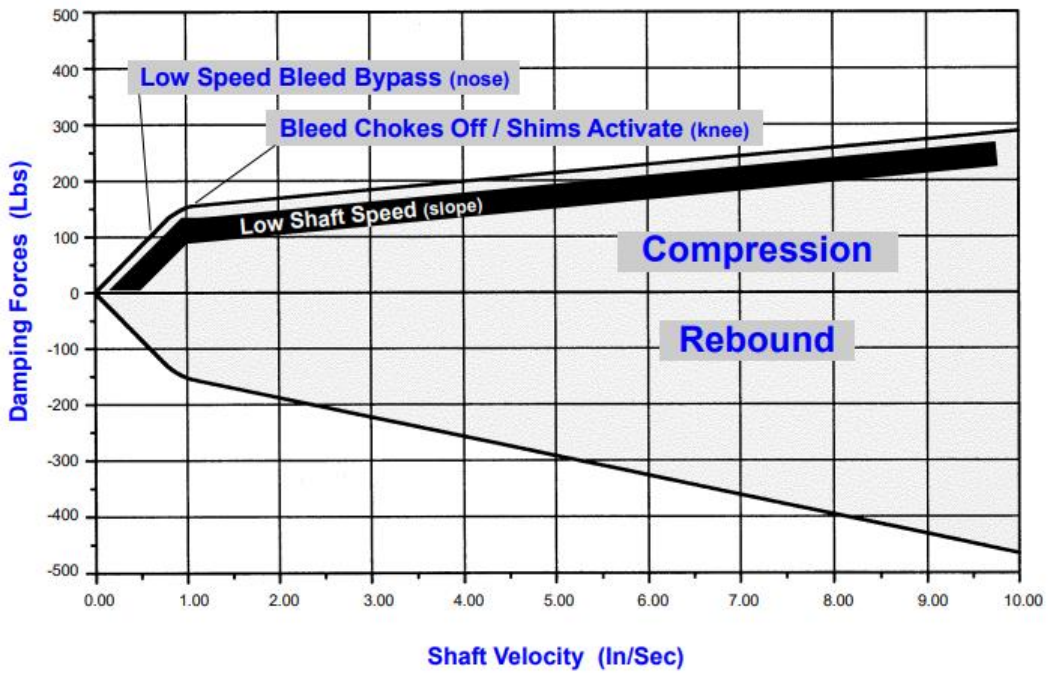

Damper Adjuster Guide

NOTE: Do not over-tighten the adjusters. When making adjustments, they will have a positive stop. In order to close off the bleed, you do not need to continue to turn the knob for it to seal.

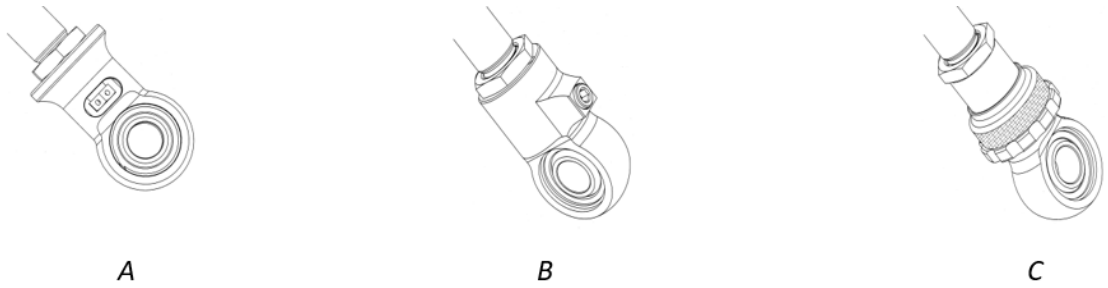

Rebound Dampers

Rebound Adjuster – There are several options for the rebound adjuster as displayed above. Turn the adjuster Clockwise will increase damping/ Stiffer, Turning it Counter-clockwise will reduce damping softer. (Clockwise = stiffer, Counter-clockwise = softer)

A. Sweep Adjuster, operated by pick or pin.
B. Hex Adjuster, operated by 4mm or 5/32 Alan Key.
C. Knob Adjuster, hand operation.

To Set Adjusters:

1. Turn knob or screw or sweep adjuster clockwise to full stiff.
2. Turn adjuster back "counter clockwise" to desired settings. Typically this is shown as a negative (-) settings. Example: Compression -5 clicks, Rebound -10 clicks/sweeps.
3. During discussions on handling, if you were to be instructed to "soften rebound by 5 clicks" it would mean to adjust your rebound counter-clockwise by 5 clicks or sweeps, depending on your adjuster.

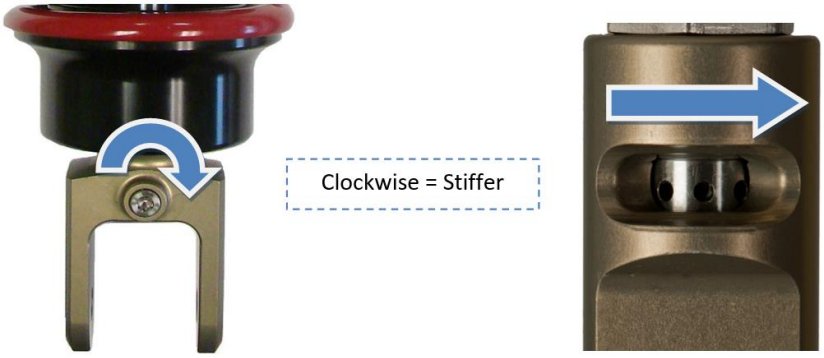

Knob Adjuster

+ = More Damping/Stiffer
- = Less Damping/Softer

The adjuster (red knob) is located at the base of the adjustable platform. During the compression or rebound stage of the shock movement, fluid is forced through two ports in the main shaft. Inside the main shaft is a needle and jet assembly, which adjusts the amount of fluid passing through the jet. By turning in the adjuster (clockwise), the needle is forced up into the jet, restricting the fluid, causing firmer damping forces. In reverse, by turning the adjuster out (counter clock-wise), more oil is allowed to pass through the jet causing lighter damping forces. The adjustment assembly, is a timed control for the shims located on the main piston to work.

NOTE: This is the Rebound adjuster unless specified otherwise.

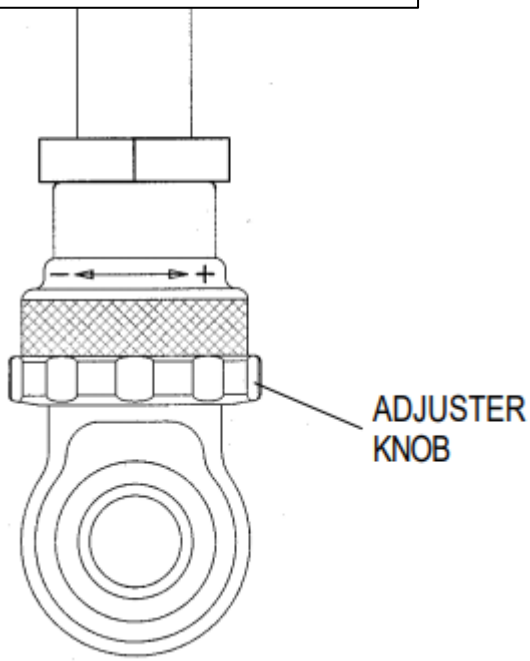

Flat Track and Buell Rebound Adjuster Applications Only

The rebound adjuster screw on the 8900 Series shock absorber is located in the adjustable platform at the base of the main shaft. The rebound adjuster has 25 to 30 clicks of adjustment. Note: the external rebound adjustment is only a fine tuning device for the main valving located inside the shock absorber. During the rebound (extension) stage of the shaft movement, fluid flows through two ports in the main shaft. Inside the main shaft is a needle and jet assembly which adjusts the amount of fluid passing through the ports. By turning in the rebound adjuster (clockwise), the needle is moved into the jet, restricting the flow, causing firmer rebound damping forces. In reverse, by turning the adjuster out (counter clockwise), more oil is allowed to pass through the ports causing lighter rebound damping forces. This rebound adjustment assembly, is in fact a timed control for the rebound shims located on the main piston.

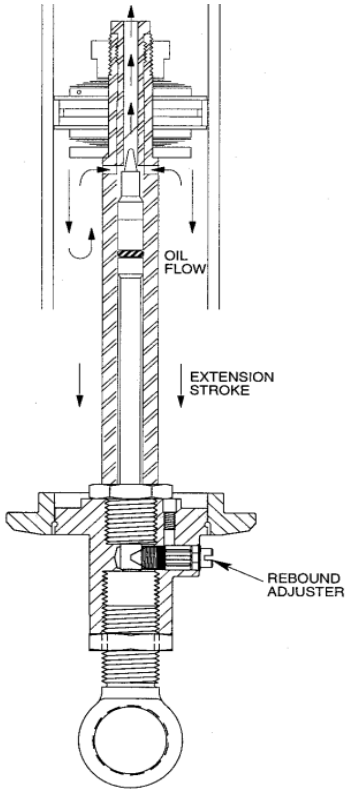

8975 Compression Adjuster

Compression Adjuster (5/32 or 4MM ALLEN KEY)

This is located in the body cap. This allows for 40 different positions of compression adjustment.

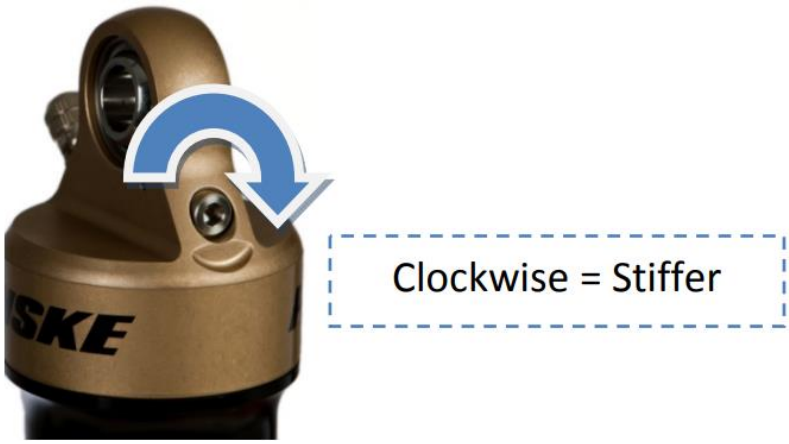

8983 Compression Adjusters

Compression adjuster is the knob that is located on the remote or piggy back canister. This will generally have 20-22 clicks of compression. If instead of a knob, you have a 13mm or ½" hex head, you will have 20 clicks of compression adjustment. Turn the adjuster clockwise for stiffer/ more damping, counter clockwise for softer/less damping.

8987 Low Speed Compression Adjuster

In the state of low shaft velocities (weight transfer during braking, cornering and acceleration) oil is displaced into the reservoir in direct proportion to the volume of the shaft entering the shock absorber body. The displaced oil is metered within the compression adjuster by an adjustable needle and jet assembly. Reducing the flow of oil through the assembly by restriction allows the damping forces to be increased.

The low speed compression bleed bypass adjuster has approximately "26 clicks" of adjustment. Turning the adjuster knob clockwise increases the low speed damping.

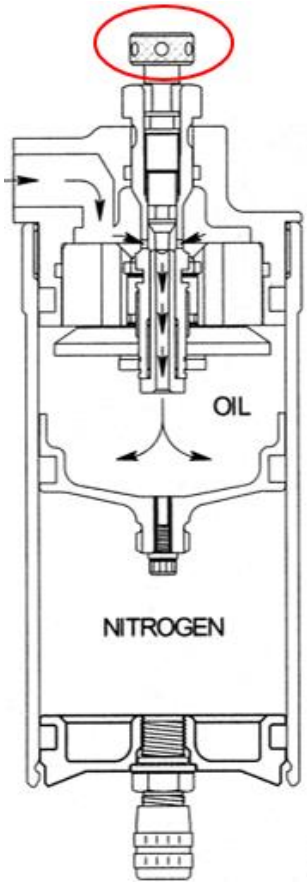

8987 High Speed Compression Adjuster

In fast shaft movement (i.e. bumps, track inconsistencies, etc.), oil is displaced into the reservoir, as in the low speed state, but at a much faster velocity. The oil is forced to bypass the low speed needle and jet due to the fact that the small orifice in the jet causes the oil to hydraulic. In turn, the oil is forced through another piston in which its orifices are covered by another shim stack. This shim stack is preloaded with force from the CD cage and preload shims.

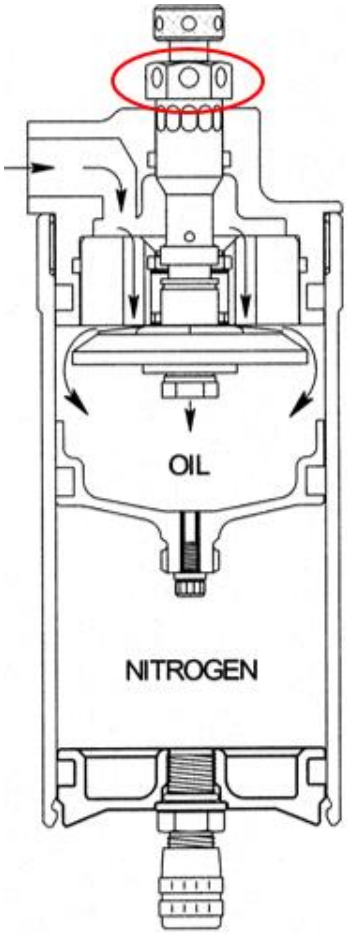

Turn 13mm Hex high speed adjuster clockwise will increase damping/ stiffer, preloading the CD cage and shims, making it tougher for the oil to flex the shims. There are approximately “18 clicks” of adjustment.

The operation of the high speed adjuster assembly effect is timed by the adjustment of the low speed needle and shaft velocity. (i.e., if the low speed needle is full soft, at high speed a larger volume of oil will initially pass through the low speed jet slightly delaying the operation of the high speed bypass mode.)

NOTE: When making adjustments on the high speed adjuster, start at the full soft setting (adjuster wound all the way in against the reservoir body) counting the clicks toward full firm. When adjusting low speed, start at the full firm setting (adjuster wound all the way in against high speed adjuster) counting the clicks toward full soft. This makes your settings more precise and less confusing for your records.

Street Tuning - Symptoms & Suggestions

A. The simplest way to adjust in your suspension is to find a loop approximately 5 miles long where you can create multiple situations, sweeping corners, tight or braking corners, harsh bumps. It is also ideal for you to find a quick or easy stopping place. Ride on the factory pre-settings, make changes, evaluate changes and continue and repeat in order to dial in "your" ideal setting.

B. Write down your original or current best setting. Then change only one adjustment at a time. Be patient, go back to your original settings if you get lost.

Harsh over bumps: If shaft travel is not within 1/8" from bottom (Black) bump rubber:

1. Go softer with compression, 2 to 4 clicks at a time (counter clockwise), if better continue going softer.
2. Reduce rear spring preload (increase sag) -1 turn at a time on spring perch.
3. Change to a softer spring rate.

Harsh over bumps: If shaft travel is clearly into the bottom (Black) bump rubber:

1. Too soft on compression can bring about a harsh feeling by allowing too much shock travel and compressing the bump rubber. Go Stiffer with compression, 2 to 4 clicks at a time (clockwise), if better continue going stiffer.
2. Increase rear spring preload (reduce sag) + 1 turn at a time on spring perch.
3. Change to a stiffer spring rate.

Wallowing exiting corner:

1. Stiffen compression, 2 clicks at a time. (clockwise)
2. Increase rear spring Preload (reduce sag). 1 turn
3. Slow down rebound, 2 clicks at a time (clockwise).
4. Change to a stiffer spring rate.

Slow turn-in:

1. Raise fork legs in triple clamps – More fork tube sticking out of top of triple clamps. 3mm-5mm per change
2. Increase rear eyelet length, 1/2 to 1 turn at a time. – If applicable
   *Cannot exceed 12mm of thread exposed.
3. Soften fork compression
4. Reduce fork Preload (Increase sag)
5. Speed-up rear rebound. Counter Clockwise or (-)

Mid corner push - front:

1. Stiffen rear compression
2. Slow down fork rebound

Warning

Penske Racing Shocks recommends running **no lower than 80 psi in our motorcycle shocks** depending on piston and shims being used. Lack of nitrogen pressure could result in "cavitation" which can result in loss of immediate damping and rider feel.
We also **do not recommend using pressure higher than 200 psi**. This could result in stress fractures in main mounting components which may lead to seal or other failures.
Always check with Penske Racing Shocks technicians on recommended pressures for your application and use.

Troubleshooting

Signs of Fluid

If the area around the shaft bearing and shaft exhibits a small amount of moisture, this is normal. In order to reduce friction in the system, seal squeezes are slightly relaxed which serves the purpose to allow a small amount of fluid to be wicked onto the shaft when the shock operates. If you see excessive amount of fluid that may "pool" on the top of the shaft bearing, you may have a seal problem. Contact Penske Racing Shocks UK representative at once.

Loss of Gas Pressure

If the shock for some reason loses its gas charge, a tell-tale sign of reduced or no gas pressure is that the shock (without a spring) when compressed, will not return to its fully extended position, or gradually gets much slower when reaching full extension. If you have experienced a loss of gas pressure, Contact Penske Racing Shocks UK representative at once.

Service Recommendation

Pre-Race – Inspect for oil leak, Check nitrogen pressure
30 Hours of Track Time or Yearly - Change oil, Replace O-rings, seals and valve shims.

Technical Support

E-mail:
sales@penskeshocks.co.uk

Open:
7:30 AM – 4:30 PM Monday –Thursday
7:30 AM – 1:30 PM Friday

Tel:
01543 434 580

Address:
Penske Racing Shocks
The Mill House
Packington Hayes
Litchfield
Staffordshire
WS14 9PN

Web:
www.penskeshocks.co.uk
www.spa-uk.co.uk