Technical Data Package

C6155.006: cGMP SUITABLE HEAVY-DUTY WASHDOWN LARGE CAPACITY ORBITAL SHAKER WITH CUSTOM TAILGATE TOP

2” STROKE, 1-300 RPM, 500LB LOAD CAPACITY

230V-240V, 50/60Hz

SINGLE PHASE, PLUG TYPE F

5900 Schooner St, Belleville MI 48111 – USA
TEL (800) 422-2558 – FAX (734) 665-9099
www.Eberbachlabtools.com

Corrected Speed

TDP Table of Content

I.	*Machine Specifications*	*3*
	a. Mechanical Specifications	*4*
	b. Electrical specifications	*4*
	c. Maintenance	*4*
	d. Load Capacity Chart	*5*
	e. Controls	*6*
	f. Alarms & Faults	*9*
II.	*Machine Testing Qualification & validation*	*10*
	a. Factory Acceptance Test	*12*
	b. Installation Qualification	*13*
	c. Operation Qualification	*14*
	d. Site Acceptance Test	*15*
	e. Performance Qualification	*16*
III.	*Machine Material of Construction (MOC) Documentation*	*17*
	a. Material Certification	*18*
	b. Electronics Data	*19*
	c. Assembly Prints	*23*
	d. Wiring Diagrams	*27*
	e. Material Information	*31*
	f. Spare Parts List	*35*
IV.	*Customer Signoff*	*36*

I. Machine Specifications

5900 Schooner St, Belleville MI 48111 – USA
TEL (800) 422-2558 – FAX (734) 665-9099
www.Eberbachlabtools.com

I.a Mechanical Specifications

- Stroke: 2.00” +/-0.04”
- Speed: Set to 1-300 RPM, set speed will be +/-2 RPM
  **speeds over 150 RPM are not recommended without specifically engineered tops*
- Length: 43.12” +/-0.50”
- Width: 43.12” +/-0.50”
- Height Unloaded: 33.50” +/-1.00”
- Weight Unloaded: 2350lb +/-10lb
- Max Capacity: 500 lbs (See load chart for speed specific limits)
- Tailgate Loading Capacity: 150lbs
- Base: Features included for use of narrow (21”) forklift or pallet jack
- CFD engineering services available upon request

I.b Electrical Specifications

- 230-240V Power Cord (Plug Type F)
- 750W, IP65 Servo Motor with 10:1 Gear Box
- 13.2A Max amperage draw. This calculation is based on a motor overload (maximum amps, not normal running conditions) and max outlet amperage draw. Eberbach recommends a 15A outlet
- 1.6kWh max. This calculation is based on a motor overload (maximum wattage, not normal running conditions) and max outlet amperage draw
- Emergency Stop Button
- RJ45 Ethernet Port for accessing ProfiNet system
- USB Port for accessing Data Logs on HMI
- Washdown 4” HMI touch panel for controlling machine
- IP66 Enclosures for the drive & low voltage electronics
- Remote diagnostic functionality available upon request

I.c Maintenance

- Wipe exposed surfaces of machine with isopropyl alcohol twice per month or as needed.
- Keep touch screen free from dirt/debris.
- Verify E-Stop functionality once every three months unless local safety ordinances require otherwise.
- Ensure Cord Jacketing is not frayed or Broken.
- Replace the USB port caps when the ports are not in use.

I.d Loading Capacity Chart

Always place containers in such a way as to balance the load in the center of the carrier.

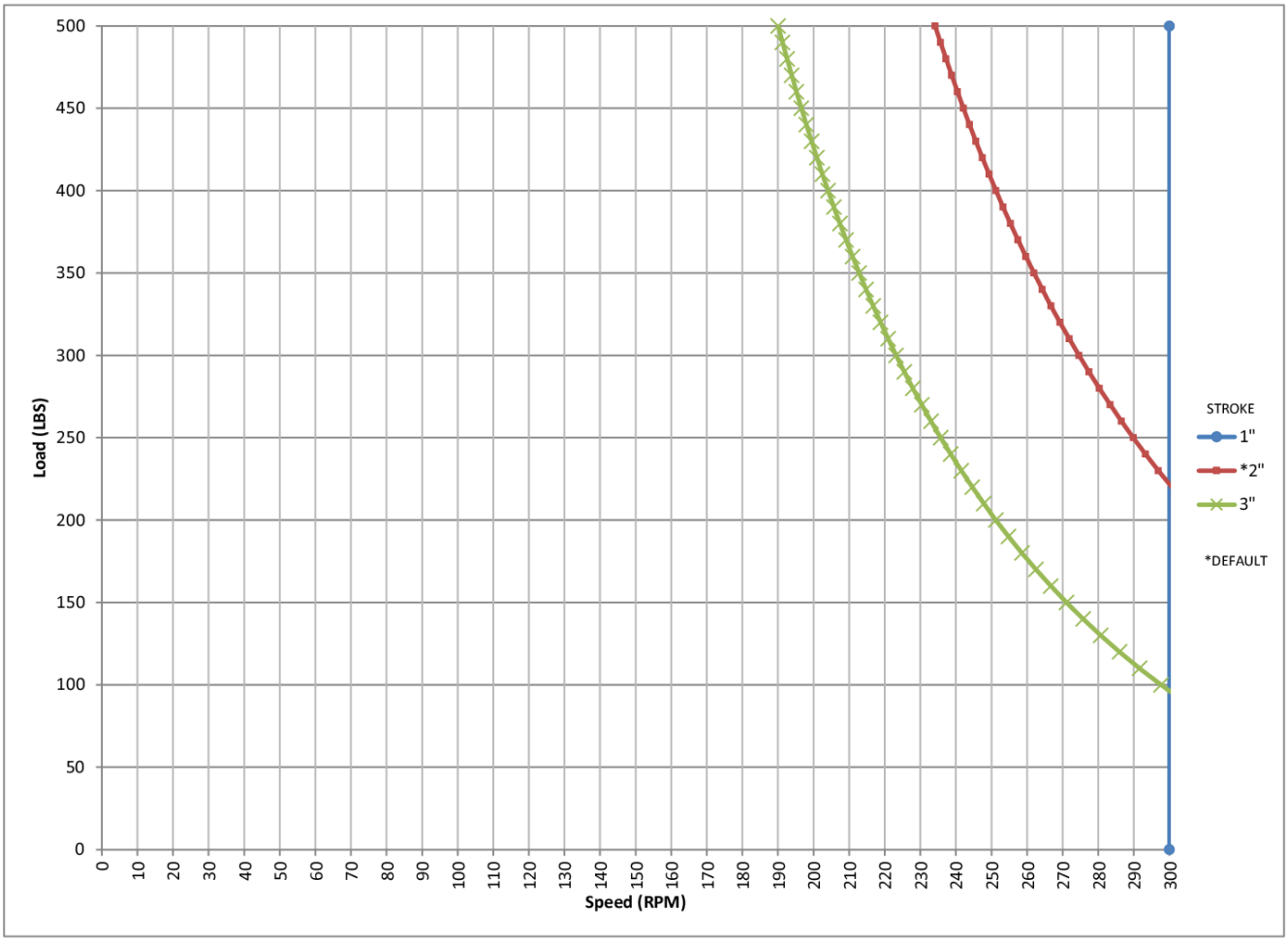

I.e Controls

WELCOME SCREEN. Welcome screen is accessed by pressing F4. You will be able to end Simatic RUN TIME by pressing the Power button in the bottom left of the screen. 'Run' button goes to RUN SCREEN. 'Timed Run Button' goes to TIMED RUN SCREEN. 'Alarm' button goes to PLC ALARM BUFFER SCREEN. 'Info' button will take users to Machine specs.

RUN SCREEN

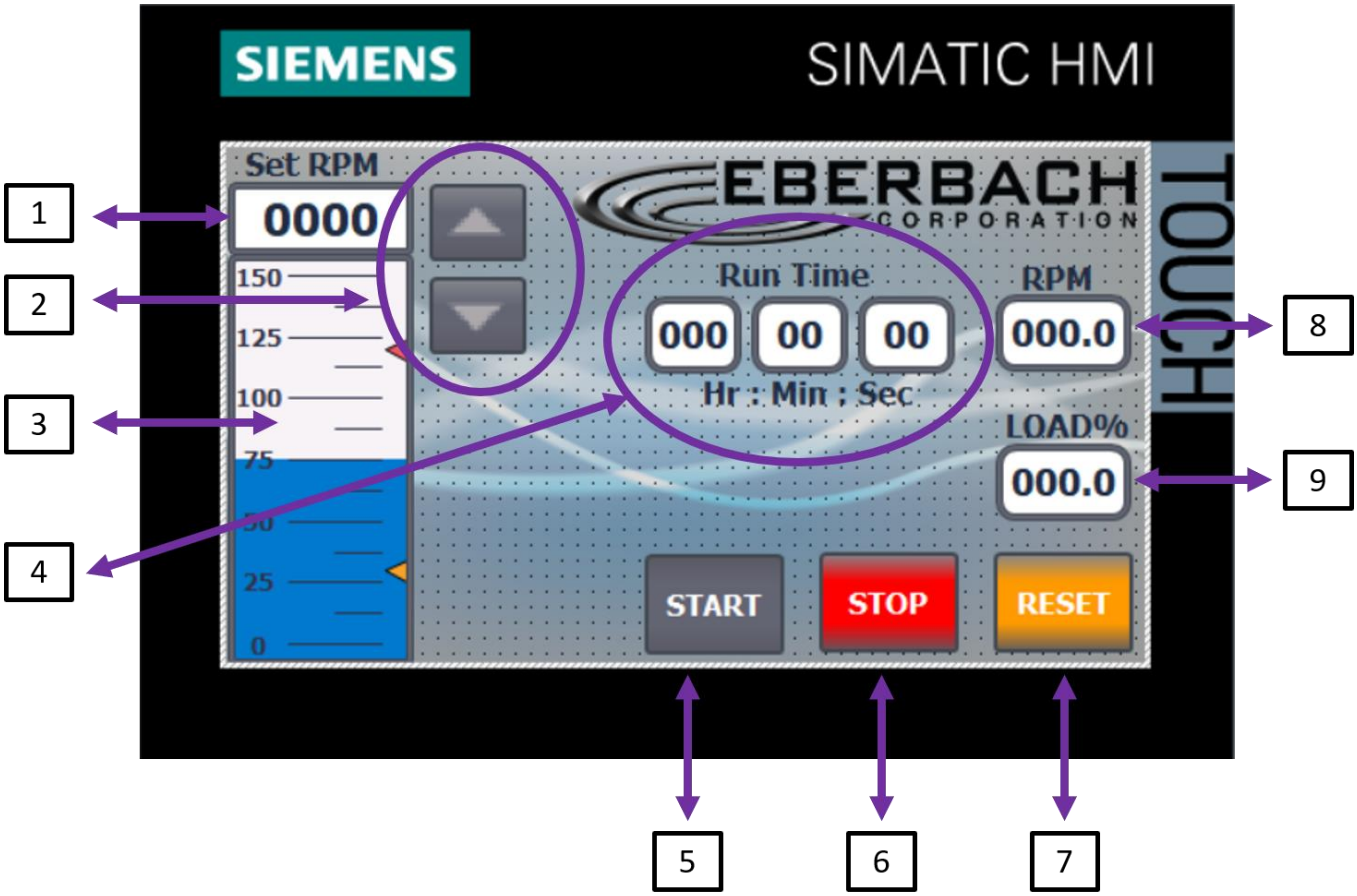

1) Set Speed Input Box
2) Set Speed Adjustment Arrows (1 RPM increments)
3) Set Speed Indicator
4) Elapsed Run Time (999:59:59) max value
5) Start Button (starts rotation)
6) Stop Button (stops rotation)
7) Elapsed Run Time Reset Button. Resets Time to (0:00:00)
8) Tachometer Box (displays actual speed of machine)
9) Load Meter (monitors torque load as percentage)

Programing Software

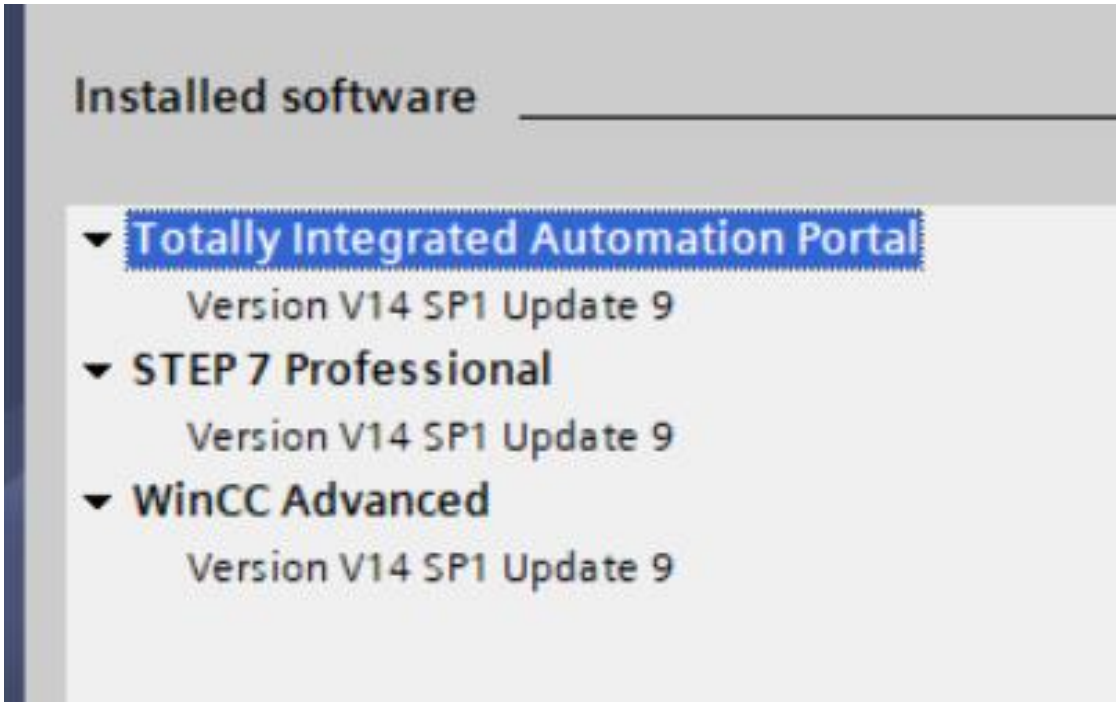

I.f Alarms & Faults

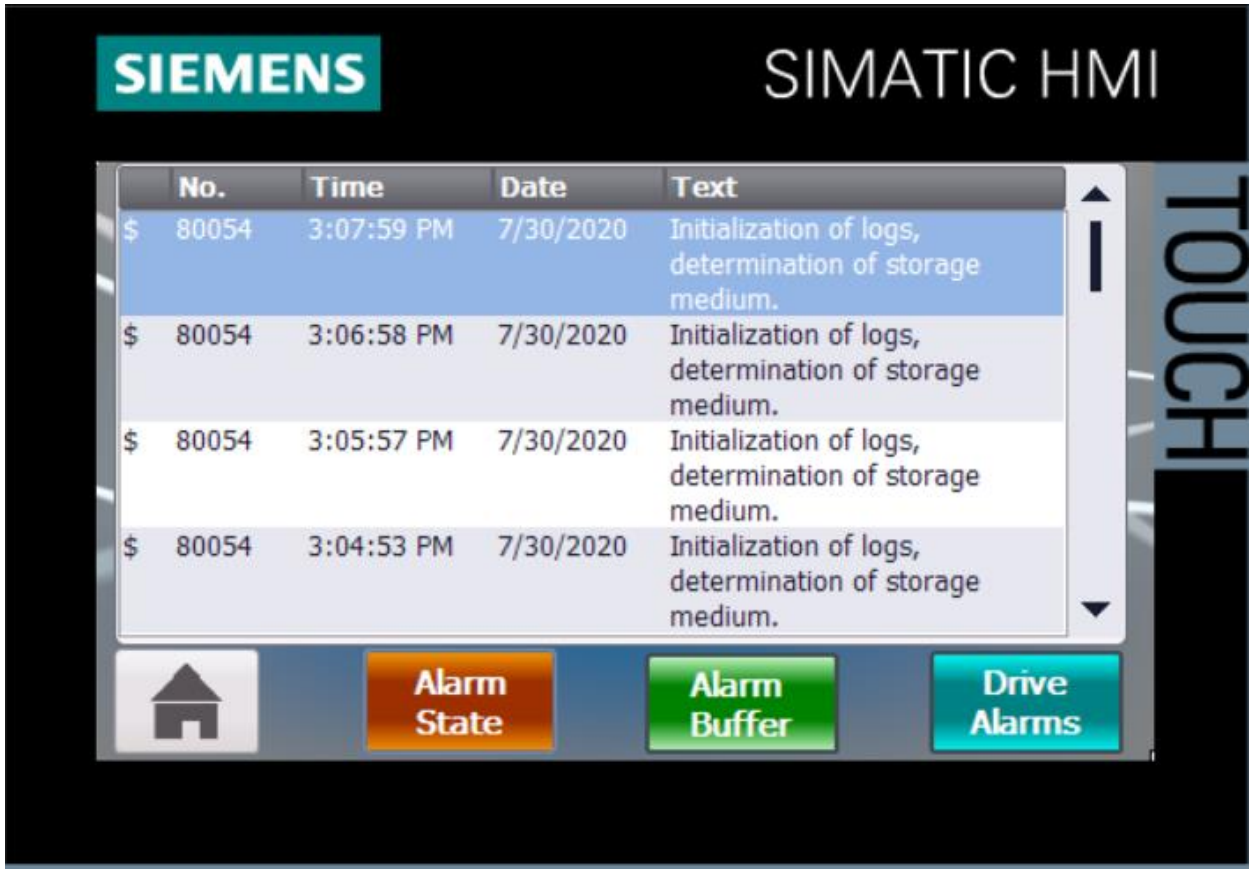

PLC ALARM BUFFER SCREEN. Shows PLC Alarms. Press the Home Icon to go to 'WELCOME SCREEN.' Press the 'Drive Faults' button to go to 'DRIVE ALARMS' screen.

II. Machine Testing Qualification & Validation

5900 Schooner St, Belleville MI 48111 – USA
TEL (800) 422-2558 – FAX (734) 665-9099
www.Eberbachlabtools.com

1. **Objective**

   The purpose of this protocol is to provide comprehensive document that validates the C6155.006 conforms with the quoted specifications; after manufacturing (FAT), prior to shipping (IQ), upon receipt at client's facility(OQ), and after installation at client's facility (SAT).

2. **Scope**

   This technical data package includes inspection procedures and acceptance criteria of tests to be performed. The scope of this document is limited to the C6155.006.

3. **Responsibilities**

   Responsibilities between Eberbach and Client are defined as follows:

Task	Responsible Group
Prepare FAT/IQ/OQ/SAT Documentation	Eberbach
Perform FAT	Eberbach
Provide FAT Data to Customer	Eberbach
Perform IQ/OQ/SAT	Client
Review & Verify the IQ/OQ/SAT	Client
Approve the IQ/OQ/FAT/SAT	Client

- Eberbach is responsible for:
  - Preparing the IQ/OQ/FAT/SAT documentation
  - Performing FAT
  - Provide FAT documentation to customer
  - Installation support
  - Use and Care manuals

- Client is responsible for:
  - Reviewing and approving this IQ/OQ/FAT/SAT documentation
  - Performing the IQ/OQ/SAT
  - All rigging activities required
  - All electrical installation requirements

4. **Reference**
   - C6155.006 Use and Care

II.a Factory Acceptance Test

(Eberbach's Responsibility)

C6155.006 230-240V 50/60Hz

Serial#:_____ **Production Order#:**_____

Step	Description	Specification or Acceptance Criteria	Result	
			Pass	Fail
1	Validate Run, unloaded	Set machine to run at 50 rpm. Speed must be within +/- 2 rpm for 5 min	☐	☐
2	Validate Run, unloaded	Set machine to run at 100 rpm. Speed must be within +/- 2 rpm for 5 min	☐	☐
3	Validate Run, unloaded	Set machine to run at 300 rpm. Speed must be within +/- 2 rpm for 5 min	☐	☐
4	Validate Timed Run, unloaded	Set Machine for a 5 minute timed run @ 50rpm. Verify the machine stops after 5 minutes.	☐	☐
5	Verify E-stop (if applicable)	During machine operation, verify E-stop functionality (at all locations if multiples exist).	☐	☐
6	Confirm machine finish	Machine panels and base are free from scratches. (cGMP compliant SS if applicable).	☐	☐
7	Confirm machine finish	Confirm that there are no sharp corners on machine / accessories.	☐	☐
8	Validate stroke	Does the machine provide a 2" displacement? Must be within +/-.04"	☐	☐
9	Verify firmware version	Verify the firmware version _____	☐	☐
10	Cumulative Run Time Validation	Machine Run Off Time, min 8hrs: _____	☐	☐
11	Vibration Analysis	Vibration Analysis Completed: _____	☐	☐
12	Machine documentation Completed	Verify the Use and Care for the machine is completed and packaged with the machine.	☐	☐

Checked by:_____

Date:_____

II.b Installation Qualification

Eberbach will provide on-line execution of the IQ & OQ with customer team for 1 day.

Step	Description	Specification or Acceptance Criteria	Result	
			Pass	Fail
1	Space Requirements	Measure installation space for placement of equipment. 45” x 45” (Width x Depth)	☐	☐
2	Electrical Power	Check for electrical requirements. 230-240V, 50/60 Hz, 1-Phase	☐	☐
3	Equipment Inspection	Inspect shipped products for signs of damage that may have occurred during shipping. Keep packaging material until Operation Qualifications has been complete. **Contact Eberbach if any shipping damage has occurred.**	☐	☐
4	Equipment documentation provided by Eberbach	Verify receipt of Use and Care from Eberbach	☐	☐
5	Review FAT	Verify that FAT has been completed by Eberbach	☐	☐

II.c Operation Qualification

Eberbach will provide on-line execution of the IQ & OQ with customer team for 1 day.

Step	Description	Specification or Acceptance Criteria	Result	
			Pass	Fail
1	IQ completed	Has the IQ been performed by the client?	☐	☐
2	Inspect equipment upon receipt	Validate that the equipment was received in good condition and that there is no damage to the equipment or packaging.	☐	☐
3	Equipment set up	Unpack and assemble the equipment per IQ.	☐	☐
4	Equipment set up	Verify the equipment/machine set up is completed.	☐	☐
5	Begin SAT	Client to conduct SAT	☐	☐

II.d Site Acceptance Test

(Clients Responsibility)

C6155.006 230V-240V 50/60Hz

Serial#:_____

Step	Description	Specification or Acceptance Criteria	Result	
			Pass	Fail
1	Validate Run, unloaded	Set machine to run at 50 rpm. Speed must be within +/- 2 rpm for 5 min	☐	☐
2	Validate Run, unloaded	Set machine to run at 100 rpm. Speed must be within +/- 2 rpm for 5 min	☐	☐
3	Validate Run, unloaded	Set machine to run at 300 rpm. Speed must be within +/- 2 rpm for 5 min	☐	☐
4	Validate Timed Run, unloaded	Set Machine for a 5 minute timed run @ 50rpm. Verify the machine stops after 5 minutes.	☐	☐
5	Verify E-stop (if applicable)	During machine operation, verify E-stop functionality (at all locations if multiples exist).	☐	☐
6	Confirm machine finish	Machine panels and base are free from scratches. (cGMP compliant SS if applicable).	☐	☐
7	Confirm machine finish	Confirm that there are no sharp corners on machine / accessories.	☐	☐
8	Validate stroke	Does the machine provide a 2” displacement? Must be within +/-.04”	☐	☐
9	Verify firmware version	Verify the firmware version _____	☐	☐
10	Cumulative Run Time Validation	Machine Run Off Time, min 8hrs: _____	☐	☐
11	Vibration Analysis	Vibration Analysis Completed: _____	☐	☐
12	Machine documentation Completed	Verify the Use and Care for the machine is completed and packaged with the machine.	☐	☐

Checked by:_____

Date:_____

II.e Performance Qualification

Eberbach provides custom engineering solutions. Please contact Eberbach for custom IQ/OQ/PQ for specific work.

Step	Description	Specification or Acceptance Criteria	Result	
			Pass	Fail
1	Validate Run, unloaded	Set machine to run at 50 rpm. Speed must be within +/- 2 rpm for 5 min	☐	☐
2	Validate Run, unloaded	Set machine to run at 100 rpm. Speed must be within +/- 2 rpm for 5 min	☐	☐
3	Validate Run, unloaded	Set machine to run at 300 rpm. Speed must be within +/- 2 rpm for 5 min	☐	☐
4	Validate Timed Run, unloaded	Set Machine for a 5 minute timed run @ 50rpm. Verify the machine stops after 5 minutes.	☐	☐
5	Verify E-stop (if applicable)	During machine operation, verify E-stop functionality (at all locations if multiples exist).	☐	☐
6	Confirm machine finish	Machine panels and base are free from scratches. (cGMP compliant SS if applicable).	☐	☐
7	Confirm machine finish	Confirm that there are no sharp corners on machine / accessories.	☐	☐
8	Validate stroke	Does the machine provide a 2” displacement? Must be within +/-.04”	☐	☐
9	Verify firmware version	Verify the firmware version _____	☐	☐
10	Cumulative Run Time Validation	Machine Run Off Time, min 8hrs: _____	☐	☐
11	Vibration Analysis	Vibration Analysis Completed: _____	☐	☐
12	Machine documentation Completed	Verify the Use and Care for the machine is completed and packaged with the machine.	☐	☐

Checked by:_____

Date:_____

III. Machine Material of Construction (MOC) Documentation

5900 Schooner St, Belleville MI 48111 – USA
TEL (800) 422-2558 – FAX (734) 665-9099
www.Eberbachlabtools.com

III.a Material Certification

Material can be provided for the following items upon request:

PartNo	DESCRIPTION	Material
• CP6155.003.001	DRIVE ENCLOSURE STANDOFF	304SS
• CP6155.003.002	BASE	304SS
• CP6155.003.313	MOTOR MOUNT	316SS
• CP6155.003.224	FRONT PANEL	316SS
• CP6155.003.225	BACK PANEL	316SS
• EP6155.S.201	ROUND SUPPORT	303SS
• EP6155.SS.220	TOP COVER	316SS
• EP6155.SS.221	RIGHT SIDE PANEL	316SS
• EP6155.SS.222	LEFT SIDE PANEL	316SS
• EP6155.SS.226	FRONT & BACK MOUNTING BRACKET	316SS
• EP6155.SS.227	SIDE MOUNTING BRACKET	316SS
• EP6155.025	LOWER BEARING LADDER	A36 STEEL
• EP6155.S.015	BEARING RETAINER	303SS
• EP6155.S.101	ECCENTRIC BLOCK	303SS
• EP6155.S.213	SPINDLE	17-4SS
• EP6155.S.253	RETAINING WASHER	303SS
• EP6155.S.252	CRANK PIN	17-4SS
• EP6155.S.202	UTILITY BOX SUPPORT	303SS
• EP6155.205	UPPER BEARING LADDER	A36 STEEL

*Non-Eberbach manufactured parts will not have material certifications available

III.b Electronics data

Technical data sheets can be provided upon request:

PartNo	DESCRIPTION
• 6544.1	EMERGANCY STOP BUTTON
• 6288.2	IP68 USB PORT PANEL MOUNT
• 6288.7	IP68 ETHERNET PANEL MOUNT
• 6506	ROCKER SWITCH DPST ON-OFF 16A
• 6760.66	IP65 5A CIRCUIT BREAKER SWITCH
• 6760.46	IP65 15A CIRCUIT BREAKER SWITCH
• 6269	125V AC PANEL MOUNT RECEPTACLE
• 6272.5	AC INLET C20
• 7107.1	DRIVE

SIEMENS

Data sheet **6AV2124-2DC01-0AX0**

SIMATIC HMI KTP400 Comfort, Comfort Panel, Key/touch operation, 4" widescreen TFT display, 16 million colors, PROFINET interface, MPI/PROFIBUS DP interface, 4 MB configuration memory, Windows CE 6.0, configurable from WinCC Comfort V11

General information	
Product type designation	KTP400 Comfort
Display	
Design of display	TFT
Screen diagonal	4.3 in
Display width	95 mm
Display height	53.8 mm
Number of colors	16 777 216
Resolution (pixels)	
• Horizontal image resolution	480 Pixel
• Vertical image resolution	272 Pixel
Backlighting	
• MTBF backlighting (at 25 °C)	80 000 h
• Backlight dimmable	Yes; 0-100 %
Control elements	
Keyboard fonts	
• Function keys	
— Number of function keys	4

Subject to change without notice
© Copyright Siemens

www.eberbachlabtools.com

SIEMENS

Data sheet **6ES7211-1HE40-0XB0**

SIMATIC S7-1200, CPU 1211C, COMPACT CPU, DC/DC/RELAY, ONBOARD I/O: 6 DI 24V DC; 4 DO RELAY 2A; 2 AI 0 - 10V DC, POWER SUPPLY: DC 20.4 - 28.8 V DC, PROGRAM/DATA MEMORY: 50 KB

General information	
Product type designation	CPU 1211C DC/DC/Relay
Firmware version	V4.1
Engineering with	
• Programming package	STEP 7 V13 SP1 or higher
Display	
with display	No
Supply voltage	
Rated value (DC)	
• 24 V DC	Yes
permissible range, lower limit (DC)	20.4 V
permissible range, upper limit (DC)	28.8 V
Reverse polarity protection	Yes
Load voltage L+	
• Rated value (DC)	24 V
• permissible range, lower limit (DC)	20.4 V
• permissible range, upper limit (DC)	28.8 V

Changes preserved
© Copyright Siemens AG

www.eberbachlabtools.com

SGM7J Gear Motors

The SGM7J gear motor product family pairs SGM7J servo motors with high precision, low backlash inline planetary gear heads resulting in a portfolio of rotary actuators fit for a wide range of applications. The family of gear motors has been thoroughly tested and adheres to the high levels of quality and performance expected from Yaskawa.

The high precision gear heads offer a variety of application advantages:

- ④ **Quiet operation** – helical cut gears contribute toward reduced vibration and noise
- ⑧ **High precision** – a standard backlash of 5 arc-min make this gear head ideal for the most accurate applications
- ⑨ **High rigidity and torque capacity** – achieved with a design which incorporates uncaged needle roller bearings
- ⑤ **Optimized adapter bushing** – minimizes inertia allowing for more output torque to be realized
- ⑫ **No leakage through the seal** – high viscosity, anti-separation grease does not liquefy and does not migrate away from the gears
- **Maintenance-free** – no need to replace the grease for the life of the unit. The reducer can be positioned in any orientation

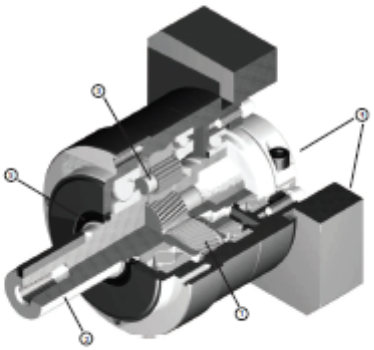

Model Designations

S7J 01 A C - VL 050 - 05

Σ-7 Series Gear Motors: SGM7J

1st+2nd digits | 3rd digit | 4th digit | 5th digit | 6th digit | 7th digit

1st+2nd digits Rated Output

Code	Specification
01	100 W
02	200 W
04	400 W
08	750 W
15	1.5 kW

3rd digit Power Supply Voltage

Code	Specification
A	200 VAC battery type
B	200 VAC batteryless type
D	400 VAC battery type

4th digit Brake Option

Code	Specification
Blank	No brake
C	24 V Brake

5th digit Gear box backlash

Code	Specification
VL	5 arc-min backlash

6th digit Gear head frame size

Code	Specification
050	50 mm
070	70 mm
090	90 mm
120	120 mm
155	155 mm

7th digit Gear Ratio

Code	Specification
03	3:1 Ratio
05	5:1 Ratio
10	10:1 Ratio
25	25:1 Ratio
50	50:1 Ratio

www.eberbachlabtools.com

III.c Assembly Prints

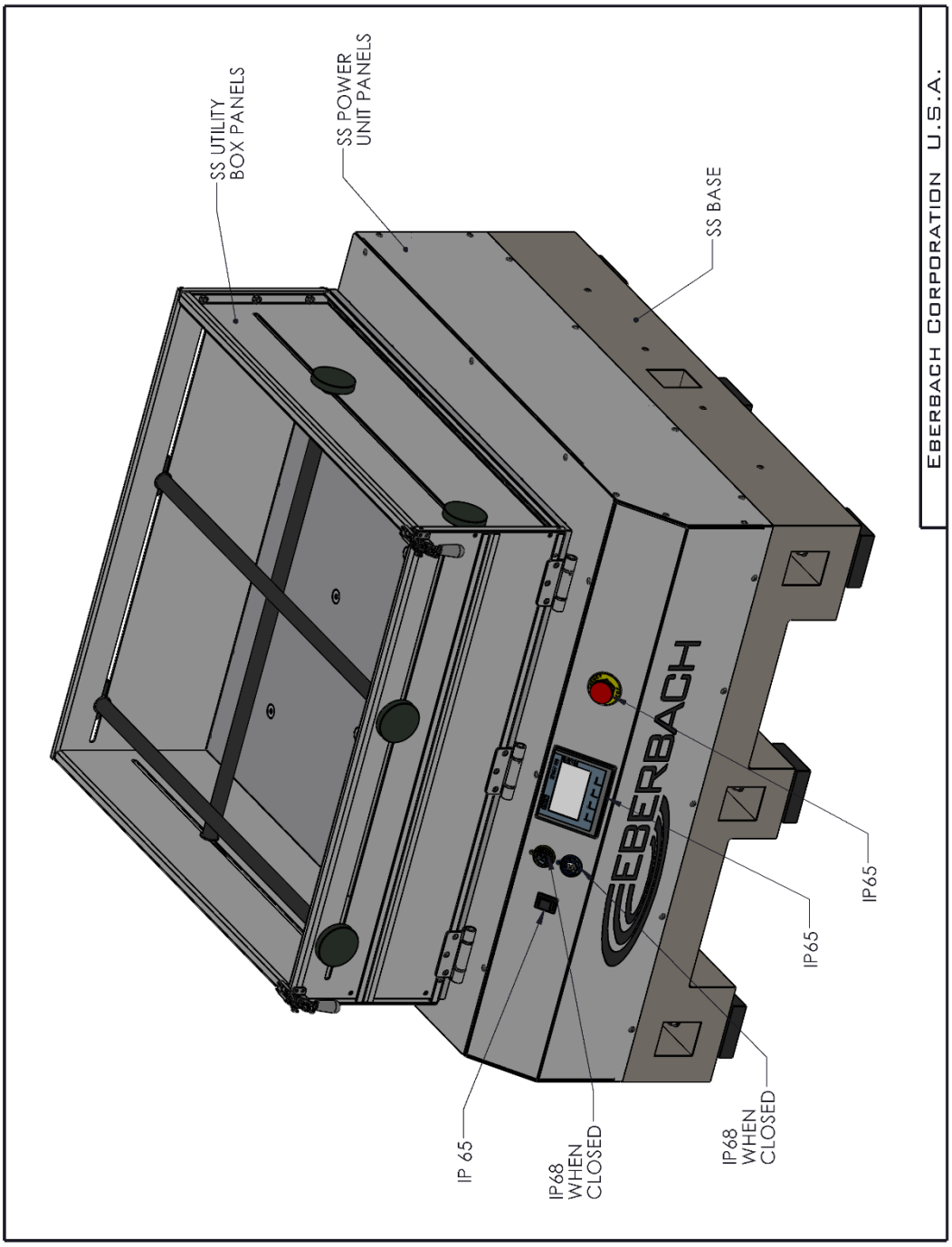

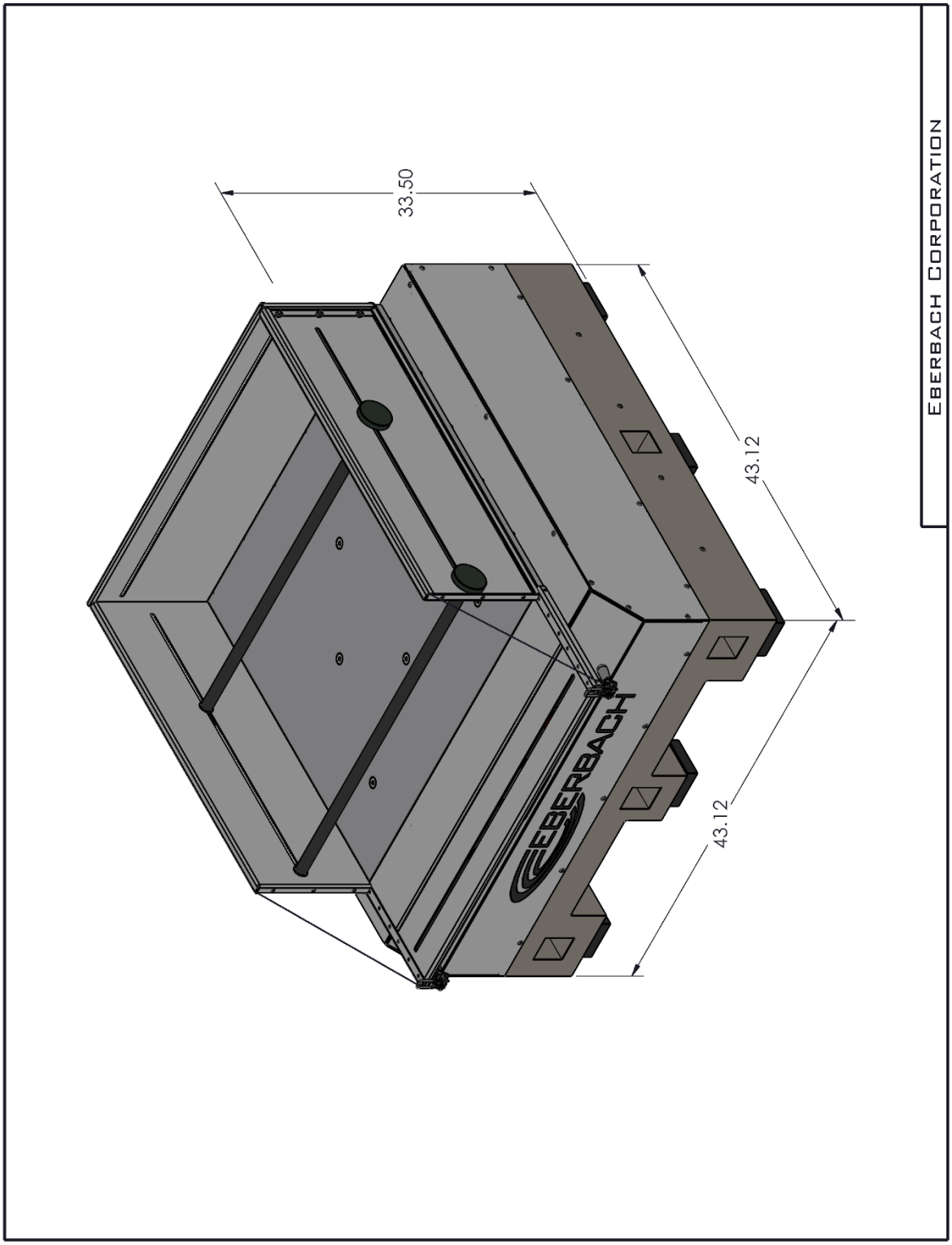
33.50
43.12
43.12
EBERBACH
EBERBACH CORPORATION

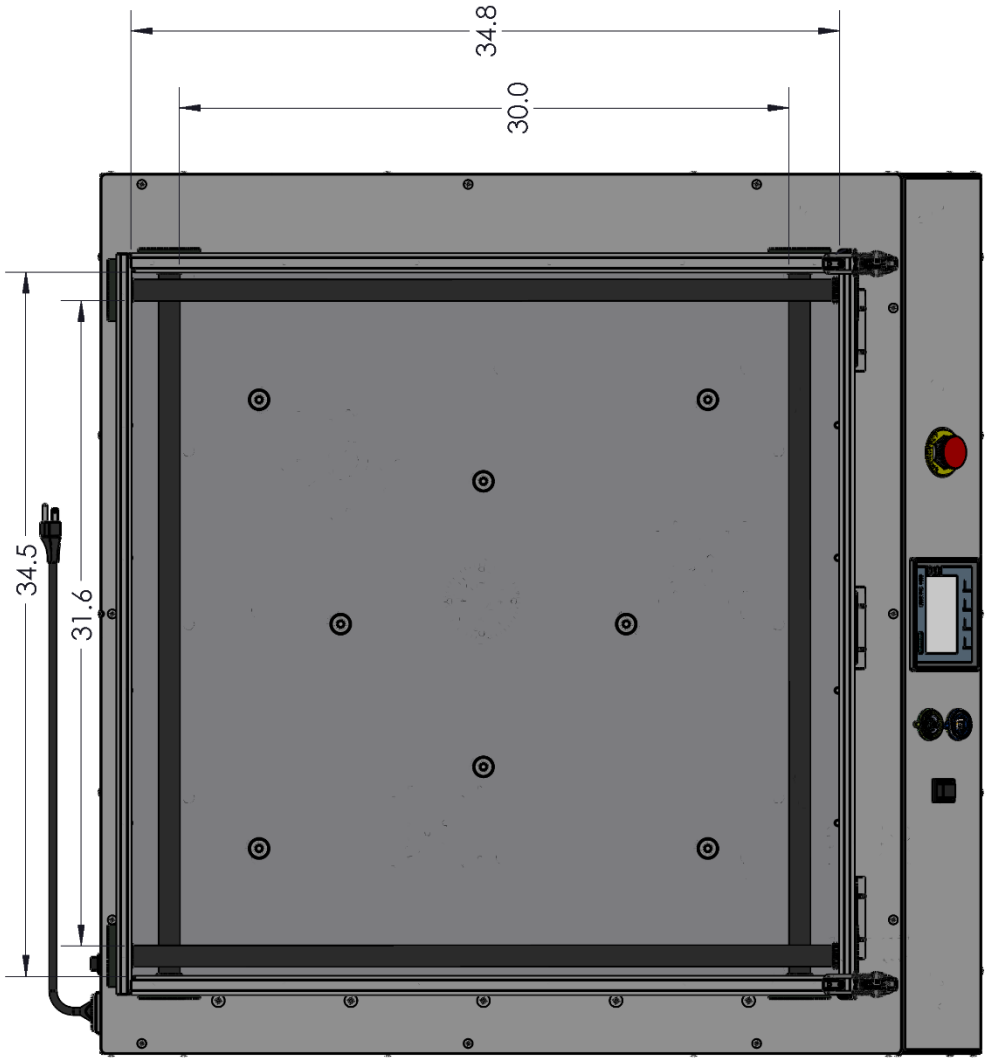
34.8
30.0
34.5
31.6

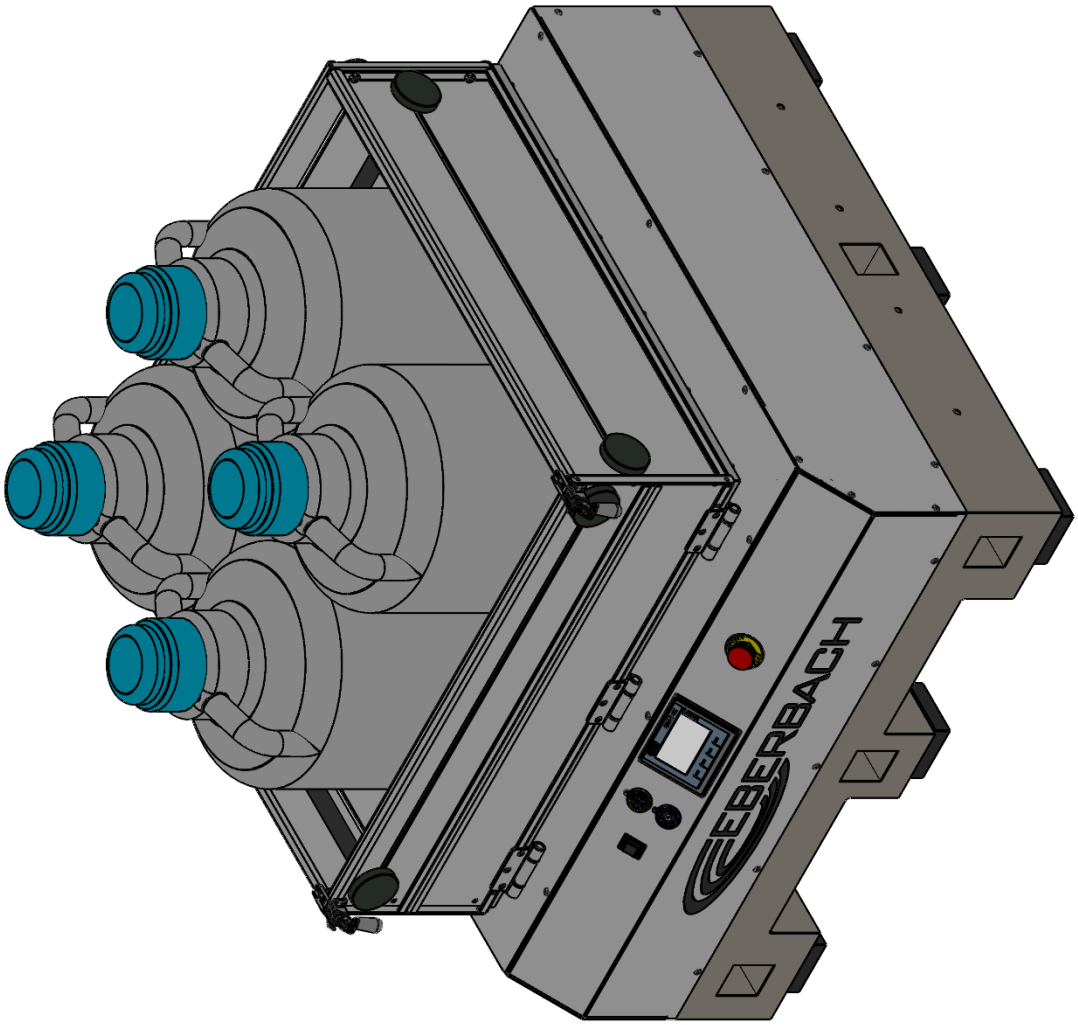
EBERBACH

III.d Wiring Diagrams

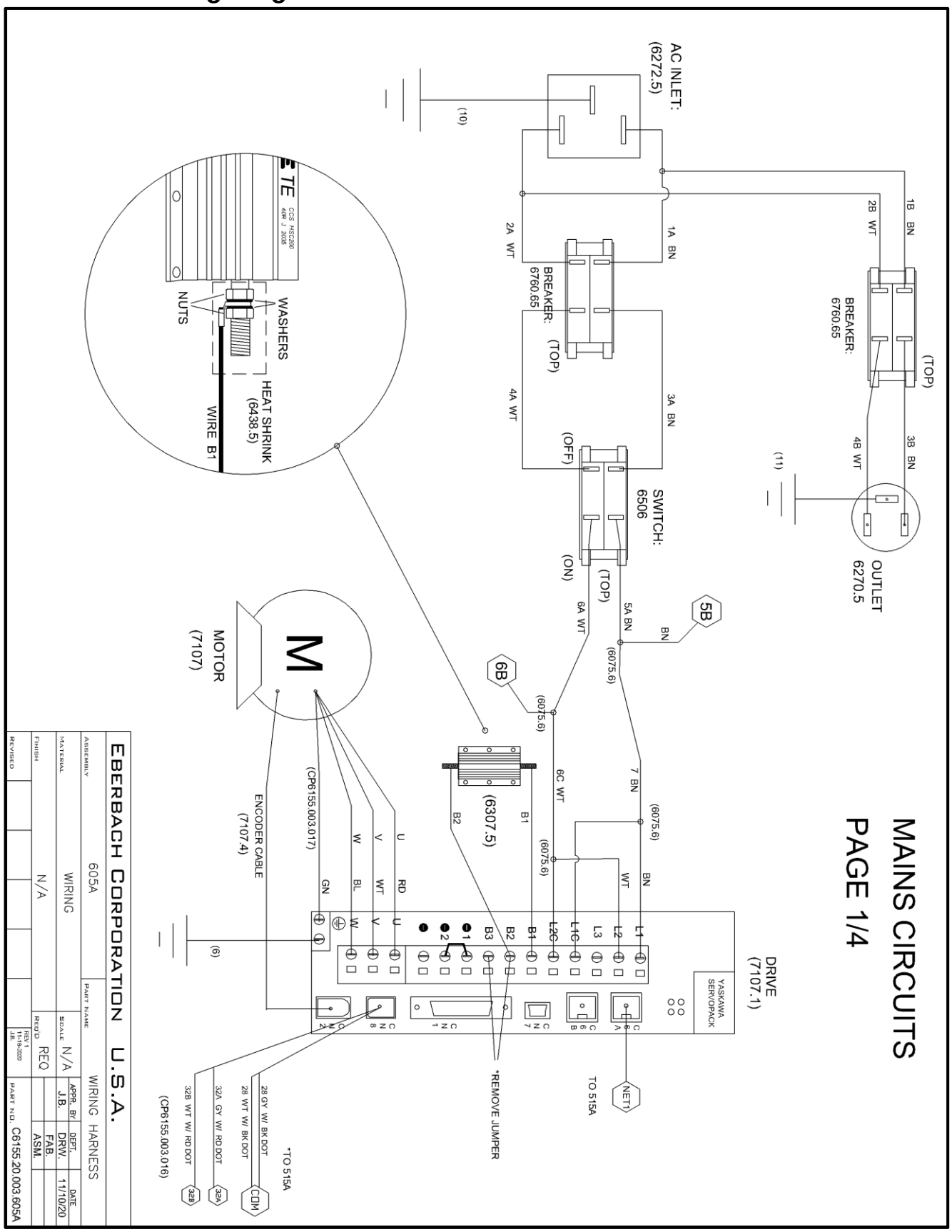

24VDC CIRCUITS PAGE 2/4

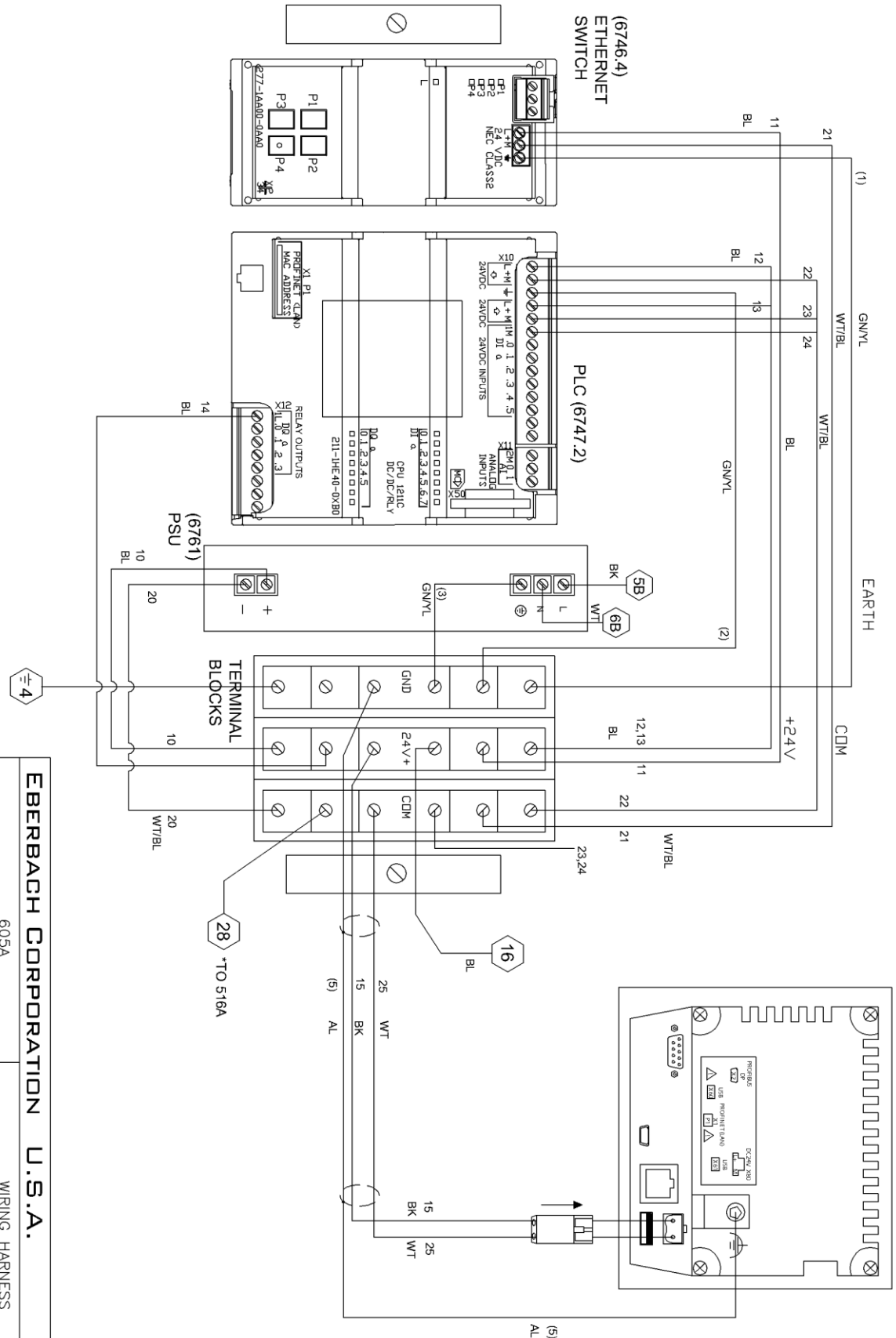

EBERBACH CORPORATION U.S.A.					
ASSEMBLY	605A	PART NAME	WIRING HARNESS		
MATERIAL	WIRING	SCALE	N/A	APPR. BY	DATE
				J.B.	11/10/20
FINISH	N/A	REQ'D	REQ	DRW.	
				FAB.	
				ASM.	
REVISED		REV 1 11-18-2020 J.B.		PART NO.	C6155.20.003.605A

www.eberbachlabtools.com

NETWORK CONNECTIONS PAGE 3/4

www.eberbachlabtools.com

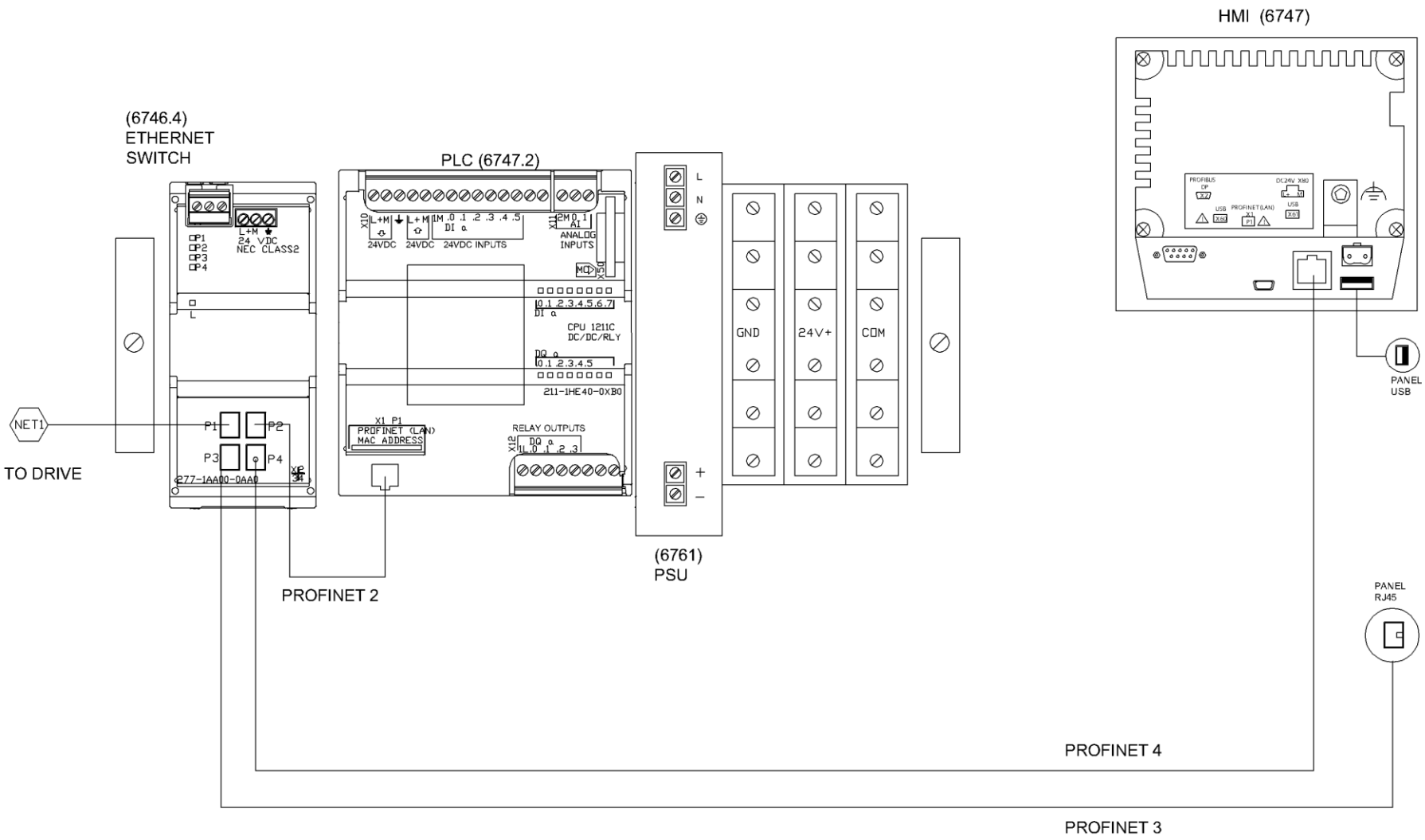

EBERBACH CORPORATION U.S.A.								
ASSEMBLY	605A			PART NAME	WIRING HARNESS			
MATERIAL	WIRING			SCALE	N/A	APPR. BY	DEPT.	DATE
						J.B.	DRW.	11/10/20
FINISH	N/A			REQ'D	REQ		FAB.	
							ASM.	
REVISED					REV 1 11-18-2020 J.B.	PART NO.	C6155.20.003.605A	

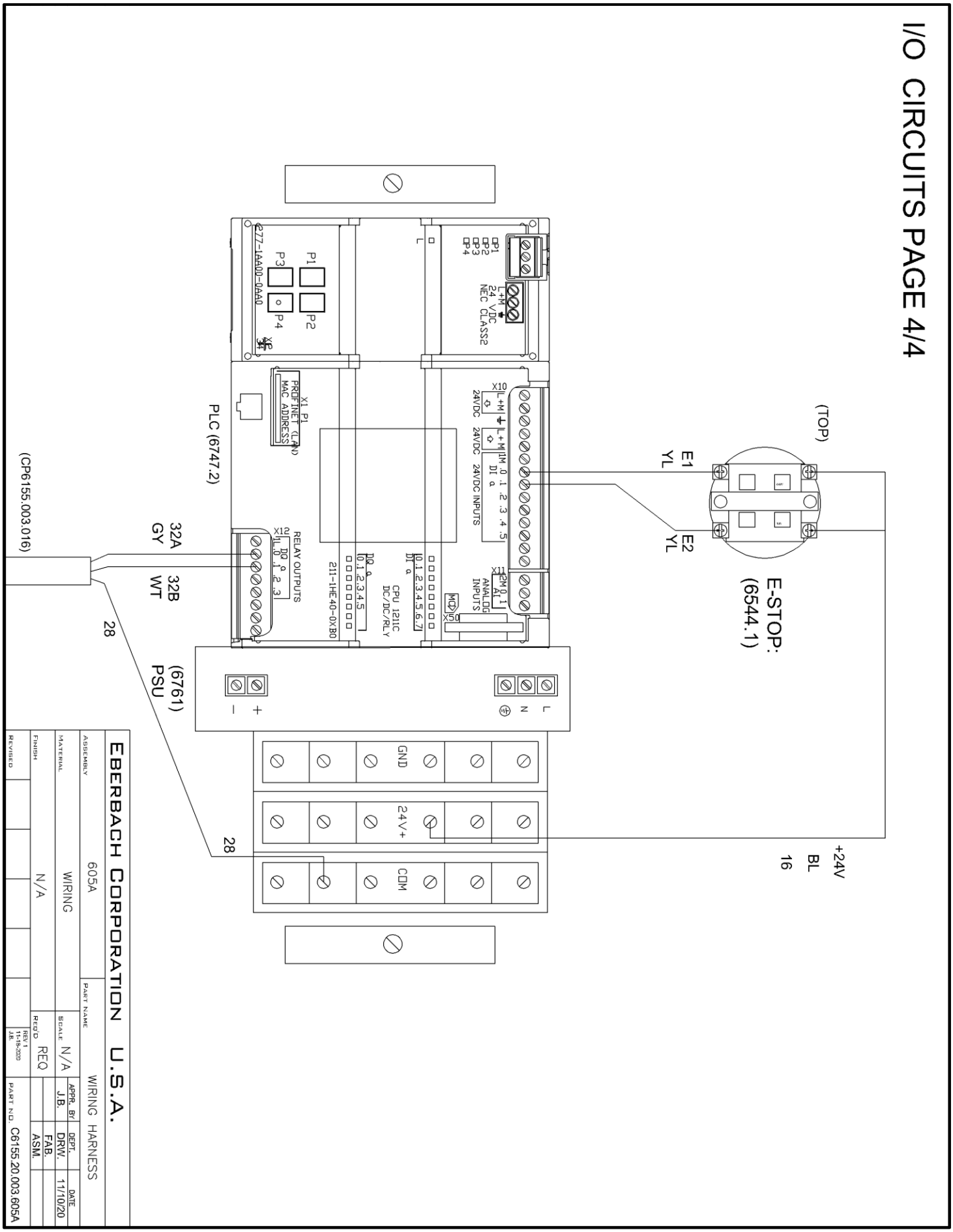

www.eberbachlabtools.com

III.e Material Information

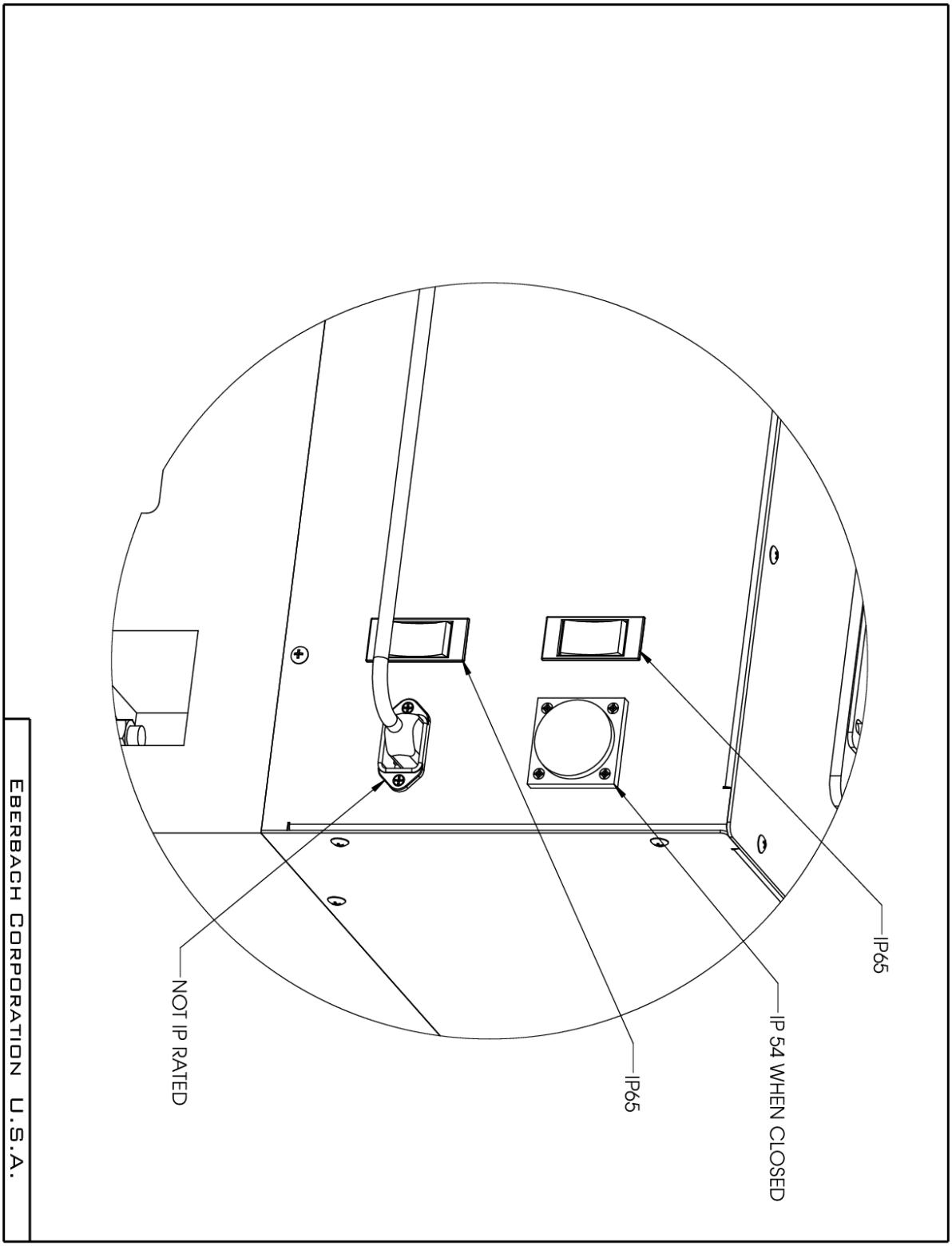

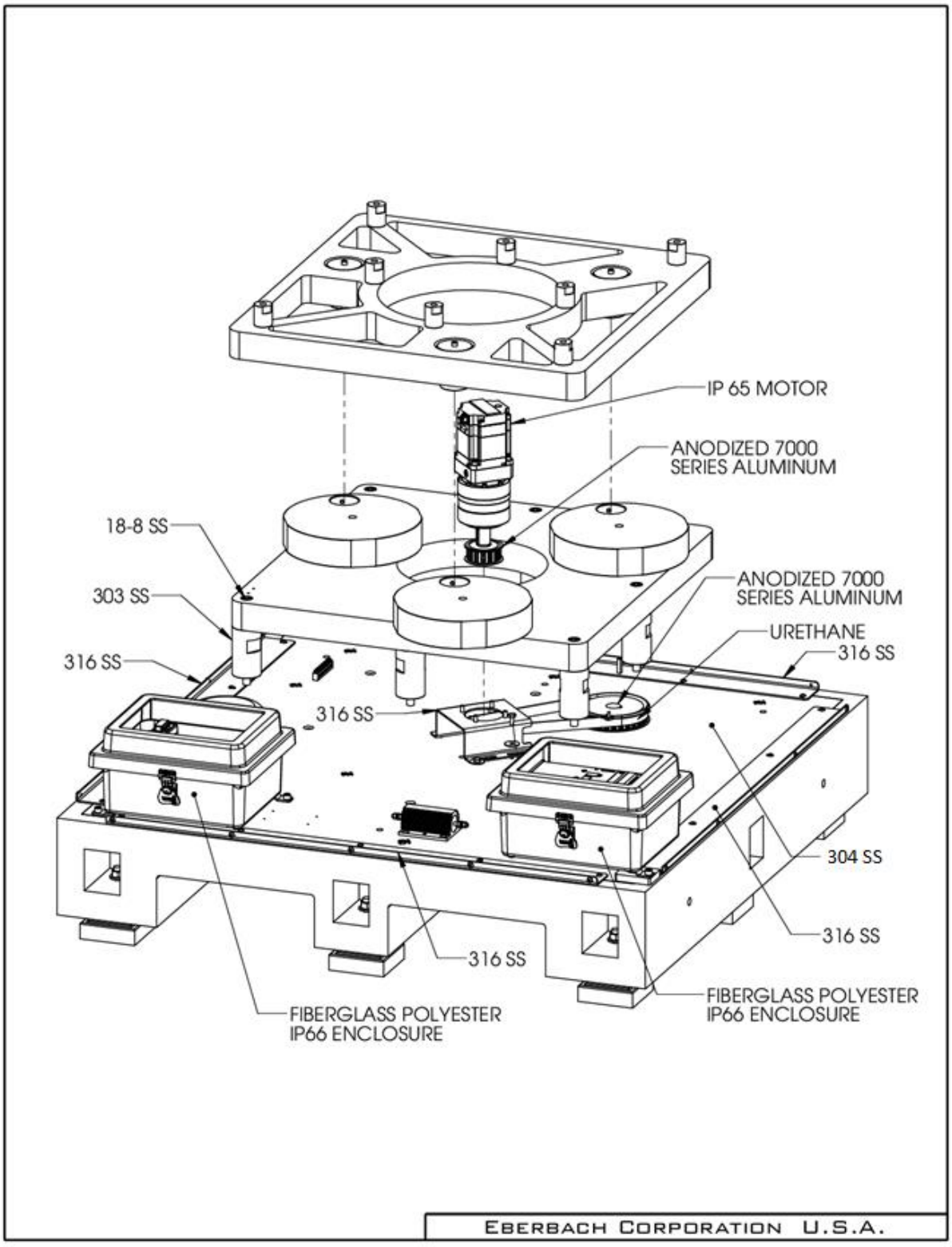
IP 65 MOTOR
ANODIZED 7000
SERIES ALUMINUM
18-8 SS
303 SS
316 SS
ANODIZED 7000
SERIES ALUMINUM
URETHANE
316 SS
316 SS
304 SS
316 SS
316 SS
FIBERGLASS POLYESTER
IP66 ENCLOSURE
FIBERGLASS POLYESTER
IP66 ENCLOSURE
EBERBACH CORPORATION U.S.A.

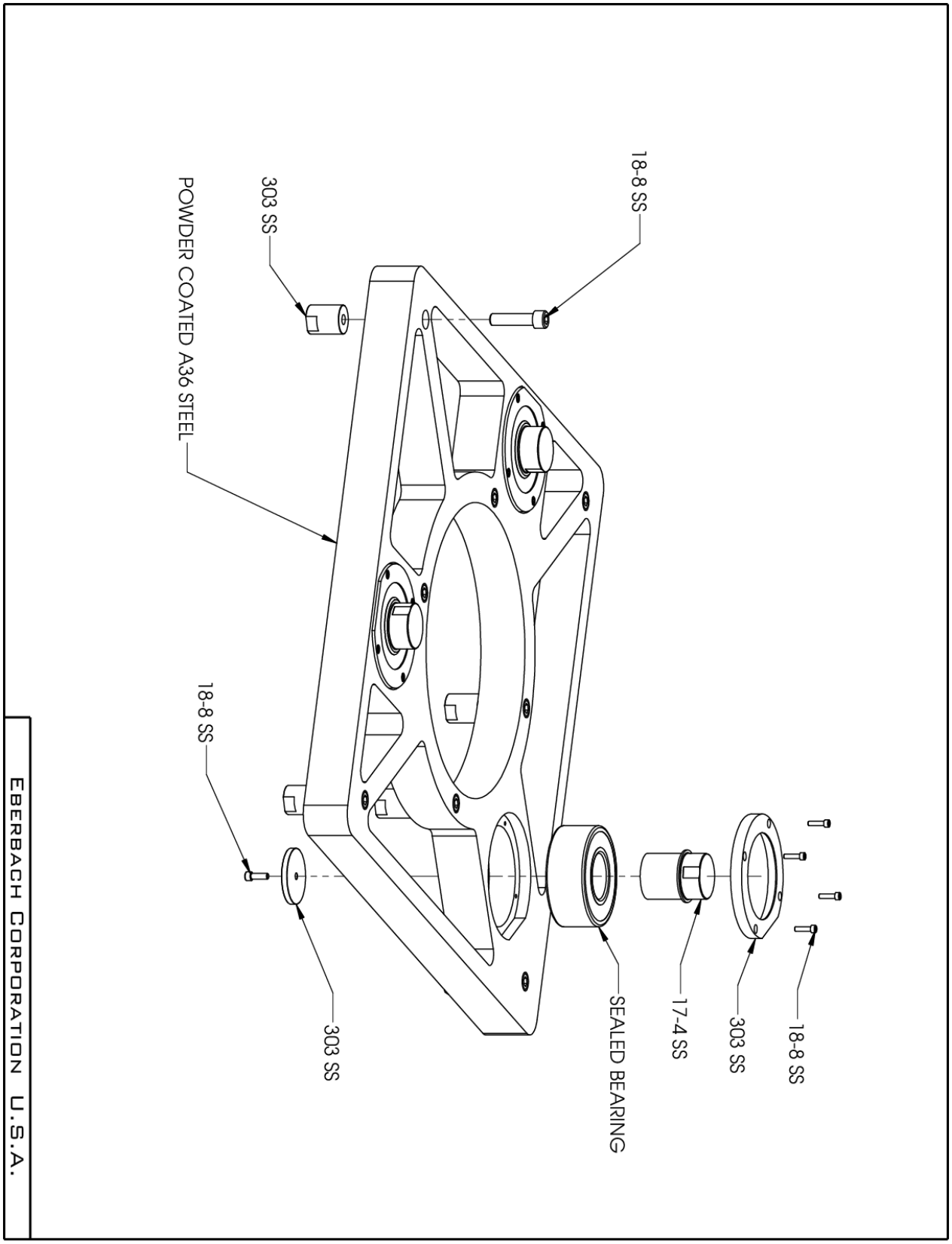
18-8 SS
303 SS
POWDER COATED A36 STEEL
18-8 SS
303 SS
SEALED BEARING
17-4 SS
303 SS
18-8 SS
EBERBACH CORPORATION U.S.A.

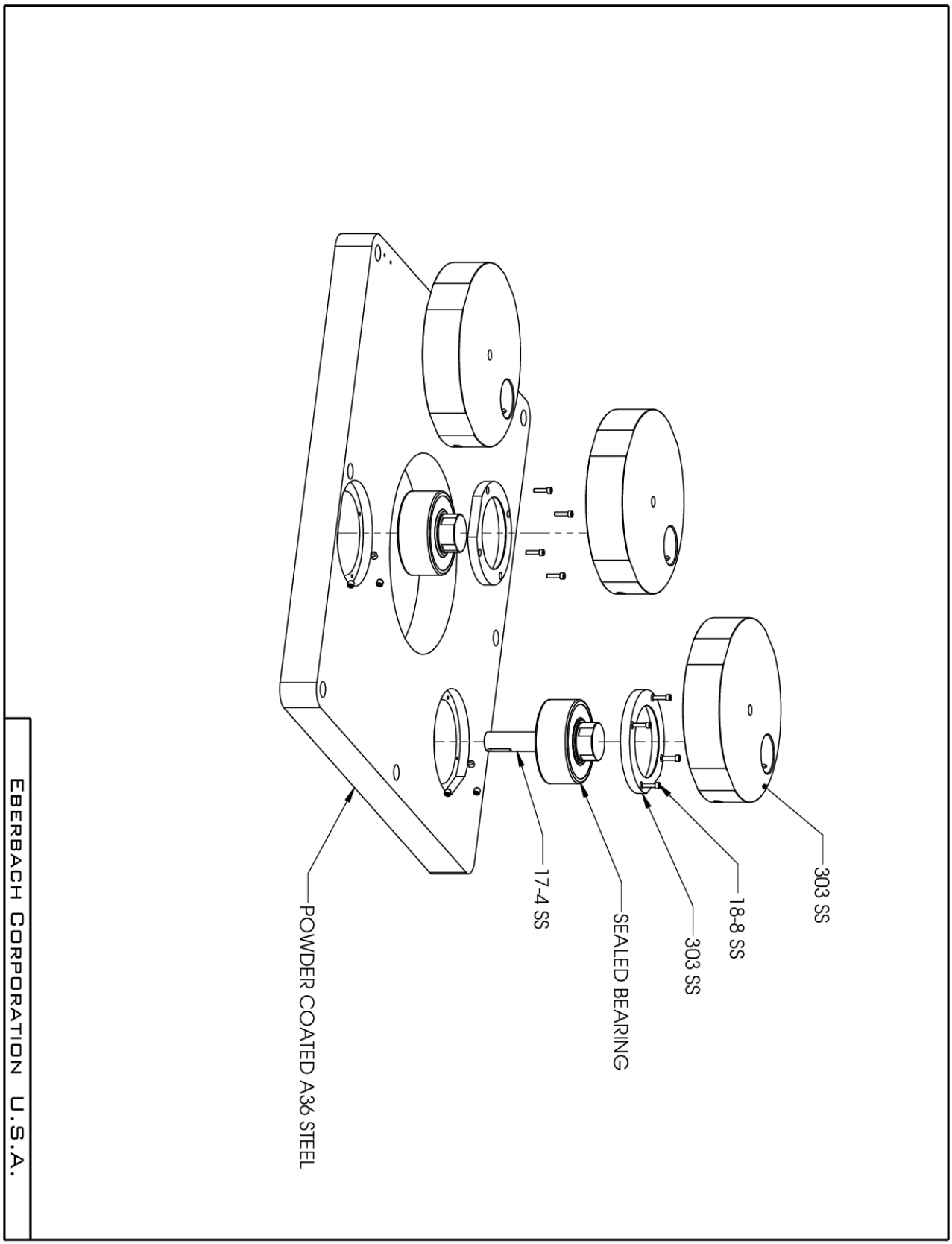
303 SS
18-8 SS
303 SS
SEALED BEARING
17-4 SS
POWDER COATED A36 STEEL
EBERBACH CORPORATION U.S.A.

II.f Spare Parts List

PartNo	DESCRIPTION	QTY
• CP6155.006.002	TAILGATE CABLE	2
• 6668.2	POWER CORD	1

IV. Customer Signoff

Name:_____

Signature:_____

Date:_____