ATOM Ka 25-50W BUC & SSPA

Operator's Manual

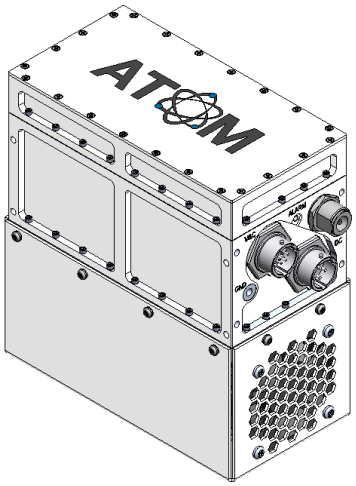

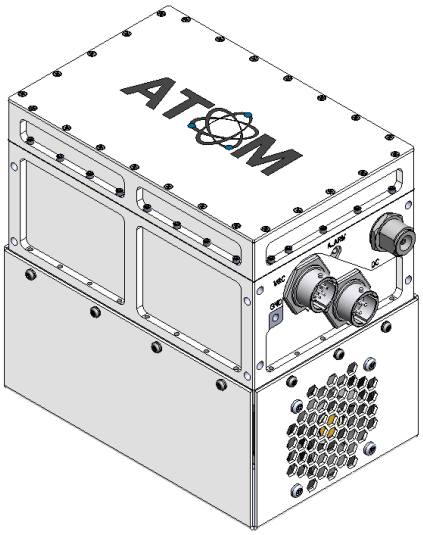

Document Number: 039092
Revision 1.3

Norsat International Inc.
110 – 4020 Viking Way
Richmond, British Columbia
Canada V6V 2L4

ATOM Ka 25-50W BUC & SSPA

OPERATOR'S MANUAL

TECHNICAL SUPPORT

This manual provides engineers with information necessary to operate the applicable system. Technical support is available from Norsat.

Norsat International Inc.
Attn: Technical Support
110 – 4020 Viking Way
Richmond, BC
Main: 1 (604) 821-2800
Support: 1 800 644 4562
sat.support@norsat.com

REVISION HISTORY

Rev	CO #	Reason For Change	Reviewed By	Author	Date yy/mm/dd
1.0	7324	Initial Release	MJS	WWP	16/03/29
1.1	7824	Revise section 2.6, IF input description	MJS	WWP	16/09/12
1.2	8191	Updated weights	MJS	WWP	17/02/03
1.3	8316	Correct Typo for changing ATOM IP Address	CW	HM	17/03/31

Non-Digital Approval (Only if required)

Scan this page with signature and attach to Change Order if this section used

Approver Name:	
Approver Signature:	
Date:	

TABLE OF CONTENTS

LIST OF FIGURES

LIST OF TABLES

Chapter 1
Introduction

Section 1.1
OVERVIEW

This operator's manual applies to all ATOM SSPAs and BUCs with the following marketing numbers:

ATOMSKAxxx (25-50W)

ATOMBKAxxx (25-50W)

This includes any ATOM that uses the 25-50W (P1dB) Ka Commercial Band (29.0-30.0 GHz), Military Band (30.0-31.0 GHz), Dual Band (29.0-30.0 GHz / 30.0-31.0 GHz) or Specific Bands.

SSPA – SOLID STATE POWER AMPLIFIER

If this unit is a SSPA, the RF input signal is amplified to the specified power.

BUC - BLOCK UP CONVERTER AND AMPLIFIER

If this unit is a BUC, the IF input signal is upconverted to Ka-Band RF frequencies and then amplified to the specified power.

Section 1.2
FEATURES

INPUTS AND OUTPUTS

Table 1-1: Input and Outputs

	25-50W
Input Type	Female N-Type Connector (BUC)
	Female SMA-Type Connector (BUC optional)
	Female K-Type Connector (SSPA)
Output Type	Waveguide WR28 (standard)
	Waveguide to Coax adaptor (Optional)

ELECTRICAL INTERFACE

M&C Connector – a ten-pin connector is used to interface with a host computer. See **Section 2.4 J2 – Monitor and Control Interface** for detailed description of the pinouts.

Power Connector – DC Units use a four-pin connector to provide power to the ATOM. See **Section 2.3 J3 – DC Power** for detailed description of pinouts.

Ground Terminal – a #10-32 screw is used to ground the chassis during use.

Section 1.3
SAFETY

WARNING	
	Leakage Current The ATOM may exhibit high leakage current during use. Ensure that the ground terminal is grounded according to local electrical codes prior to powering on the ATOM.

WARNING	
	RF Radiation Hazard The ATOM emits high power RF energy which is harmful to the human body. Do not operate ATOM unless the RF output flange is either terminated in an RF load (100W min) or connected to the feed of a terminal. Do not obstruct the RF output or feed output with any body part.

WARNING	
	Do not allow equipment to be standing in water. While the BUC/SSPA is designed to be used outdoors, the equipment is not designed to operate in standing water. Failure to follow this precaution could result in electric shock and injury to persons.

CAUTION	
	Do not allow any items to fall into the unit from the waveguide opening.

CAUTION	
	Apply voltage to the AC/DC input connector only as specified in the original configuration of this unit. Application of a voltage outside the specified range may cause the unit to become damaged or non-functional.

Chapter 2
Interface Control

Section 2.1
INTRODUCTION

The unit has three connectors on the input side of the housing and one waveguide port on the output side. The interface for these connectors is detailed in this document.

On the input side, there are the following connectors:

- J1 – IF or RF Input; N-Type Jack or SMA-Type Jack (optional) for BUC; K-Type Jack for SSPA
- J2 – Ten-pin circular connector for M&C
- J3 – Four-pin circular DC power connector
- J6 – Ground terminal

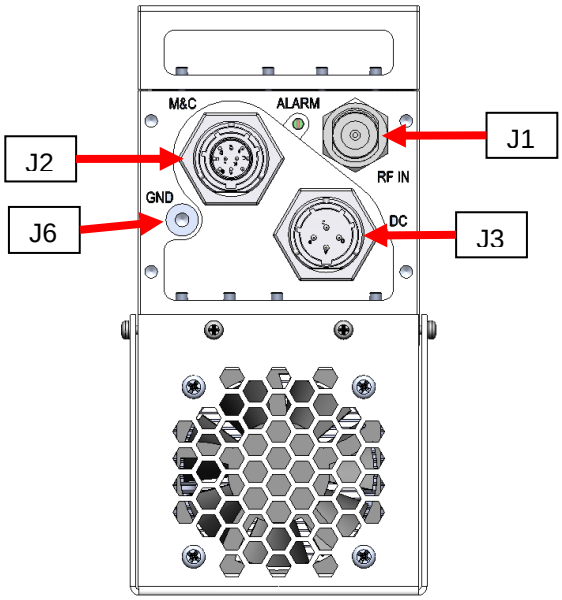

Figure 2-2 Input Connections for ATOM Ka 25W BUC Unit (N-Type Jack Shown)

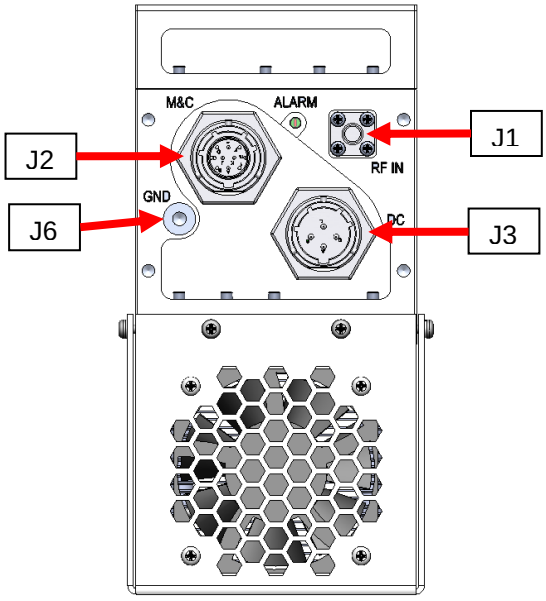

Figure 2-2 Input Connections for ATOM Ka 25W SSPA Unit

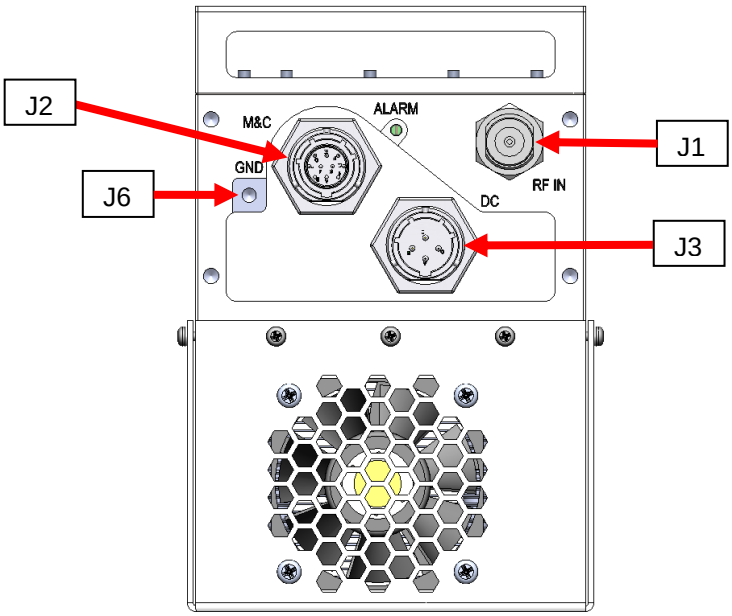

Figure 2-3 Input Connections for ATOM Ka 50W BUC Unit (N-Type Jack Shown)

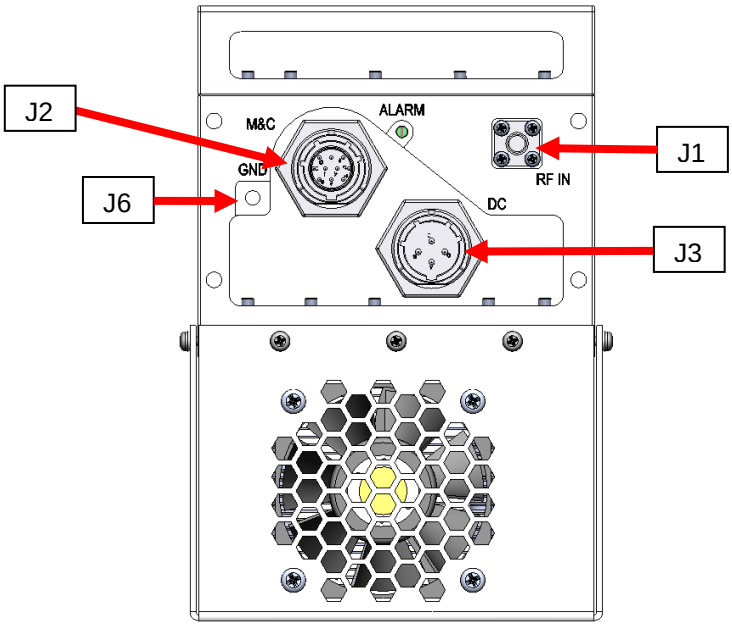

Figure 2-4 Input Connections for ATOM Ka 50W SSPA Unit

On the output side, there is one connector:

- J4 – WR28 waveguide RF output
- Optional Waveguide to Coax adaptor

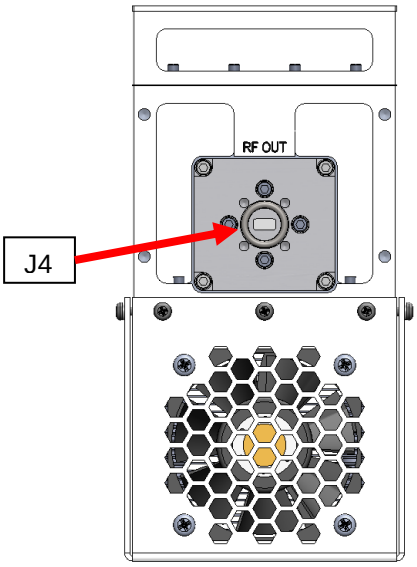

Figure 2-5 Standard Waveguide Output for ATOM Ka 25W units

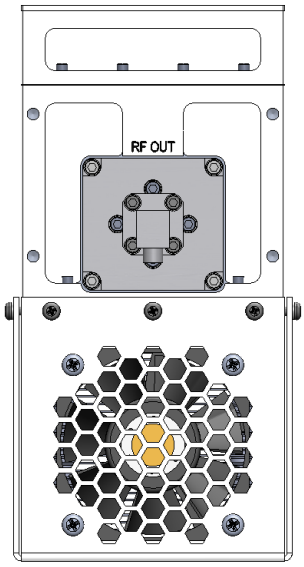

Figure 2-6 Optional Waveguide to Coax adaptor

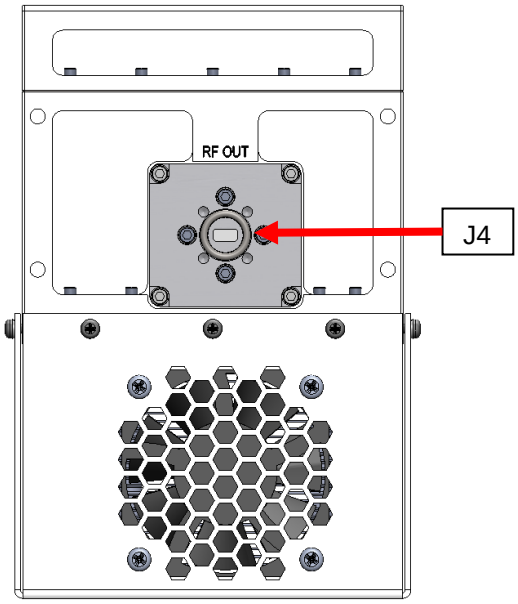

Figure 2-7 Standard Waveguide Output for ATOM Ka 50W units

Section 2.2
J1 & J6– INPUTS AND GROUNDING

J1 – IF/RF INPUT

BUC

The IF input connector is a 50 ohm coaxial connector (N or optional SMA Type). The external/internal reference mode is auto-selected. If an external reference signal is applied, the BUC will switch to external reference mode. In the absence of external reference signal, the BUC will switch to internal reference mode. This connector is DC-blocked, and appears as a 50 ohm load at DC. Do not exceed ±50 VDC on this port.

SSPA

In the SSPA-only configuration, this is the RF input. It is a K-Type connector, with performance to 40 GHz. No external reference is required for SSPA-only operation.

J6 – GROUND TERMINAL

A #10–32 screw and lock washers are used to ground ATOM. Ensure the unit is grounded before powering it on.

Section 2.3
J3 – DC POWER

The 25W & 50W ATOM Ka power input requires 20V to 56V DC power. Each ATOM is supplied with a mating connector for the power interface.

The DC unit typically requires 20V to 56V DC power. Refer to specific configuration of the unit for the exact voltage range. Power is supplied through a four pin type cylindrical connector. Two pins are used to deliver the positive connection and two pins are used for the negative connection in order to reduce resistance. The negative connection is internally connected to case ground. The negative power connection may alternatively be applied directly to the ground screw terminal on the aluminum housing.

Connector Type

The J3 connector for the DC input is a four pin miniature circular connector. This connector is a MIL-C-26482 Series 1 receptacle, shell size 12, 4 pin (Amphenol® 71-533723-4P). The connector is a receptacle with pins and requires the mating connector to be a plug with sockets (e.g Amphenol® PT06E-12-4S-SR). A range of plug-compatible mating connectors may be used to add options to the plug such as right-angle, stress relief clamp, metal color/finish, etc. Please contact the connector manufacturer for more information and/or refer to the Amphenol® catalog 12-070. Ensure the supply cable is capable of supplying at least 300W of power (for 25W ATOM Ka) or 600W of power (for 50W ATOM Ka).

DC Unit J3 Connector Pinouts

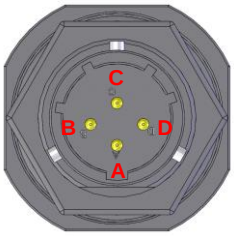

Figure 2-8: DC Unit J3 Connector Pinout

Table 2-1: DC Unit J3 Connector Pinout

Pin	Name
A	V-/Ground
B	V+
C	V+
D	V-/Ground

For the DC input, the positive terminals are pins B/C and the negative terminals are pins A/D. Pins A and D are connected to case ground internally; pins B and C are connected together internally. It is recommended to apply the supply voltage evenly to both pairs of pins to evenly share the current among both sets of wires/pins.

The internal capacitance between the V+ and V- terminals is approximately 120 microfarads.

Section 2.4
J2 – Monitor and Control Interface

The M&C interface is used to control the unit with a host computer. All on-board sensors are accessed through this interface. Use of this connection is optional. Each ATOM is supplied with a mating connector for the M&C interface.

The 25-50W ATOM can be ordered with standard or Ethernet web interface options. **Table 2-3** summarizes the M&C interface protocols available with each option.

Table 2-2: M&C Interface Options

Orderable Option	Communication Interfaces		
	RS-485	RS-232	Web Interface
Standard	X	X	
Ethernet Option	X		X

Monitor and Control Interface Pinout

The M&C interface is a ten pin miniature circular connector. This connector is a MIL-C-26482 Series 1 receptacle, shell size 12, 10 pin (Amphenol® part number 71-533723-10P). A mating connector is Amphenol® part number PT06E-12-10S-SR. A range of compatible part numbers for the mating connector may be used to add options to the plug such as right-angle, stress relief clamp, metal color/finish, etc. Please contact the connector manufacturer for more information and/or refer to Amphenol® catalog 12-070.

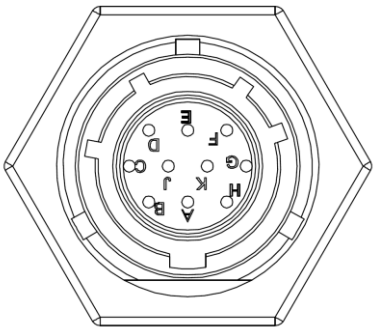

Figure 2-9: J2 M&C Connector Pin Arrangement

Table 2-3 summarizes the various pinout options for the 25-50W ATOM Ka. Note that the pin function varies according to the M&C interface option that the ATOM was ordered with. The M&C interface option cannot be changed by the user.

Table 2-3: J2 Pinouts for ATOM Configurations

Connector Pin	Standard Configuration	Ethernet Configuration	Signal Description
A	RS-485 Tx-	RS-485 Tx-	Host computer Tx- signal (signal into unit)
B	RS-485 Tx+	RS-485 Tx+	Host computer Tx+ signal (signal into unit)
C	RS-485 Rx+	RS-485 Rx+	Host computer Rx+ signal (signal out of unit)
D	Mute	Mute	Controls Muting of Amplifier
E		Eth Rx+	Ethernet host computer Rx+ signal (signal out of unit)
	RS-232 Rx		RS-232 host computer Rx signal (signal out of unit)
F		Eth Tx+	Ethernet host computer Tx+ signal (signal into unit)
	RS-232 Tx		RS-232 host computer Tx signal (signal into of unit)
G	GND	GND	Ground reference for Ethernet/RS-485/RS-232 signals. This is internally connected to case ground.
H		Eth Rx-	Ethernet host computer Rx- signal (signal out of unit)
	NC		NA
J	RS-485 Rx-	RS-485 Rx-	Host computer Rx- signal (signal out of unit)
K		Eth Tx-	Ethernet host computer Tx- signal (signal into unit)
	NC		NA

Ground Pin(s): Pin G

Ground/shield for Ethernet, RS-485, RS-232 & Mute signals. This is internally connected to the case ground. Do not exceed 100mA.

Mute Control: Pin D

This pin controls the hardware mute state of the ATOM. When muted, the power transistors are turned off, reducing power consumption and providing an RF output noise close to the thermal noise floor.

The operation of this pin is fully configurable through the M&C Interface. Pin D can be biased with either an internal Pull-Down (to 0V) or an internal Pull-Up (to 4V). Pin D is also configurable to be either active high (3-5V on Pin D will mute the unit) or active low (0-0.8V on Pin D will mute the unit). All voltages are relative to Pin G or the Case Ground.

Because of the configurable pull-down / pull-up resistor, the unit can be configured to be active (i.e. not muted) when Pin D is left floating. Therefore, it is possible to operate the unit with no connection pin D.

The ATOM mute control behavior is shown below in **Table 2-4**. Note that the ATOM may be factory ordered with alternate configurations so the Default configuration shown in the table is not reflective of all ATOM units.

Table 2-4: ATOM Mute Control Behavior

Configuration	Mute Line Polarity	Mute Line Bias	Sample Input 1	Sample Mute State 1	Sample Input 2	Sample Mute State 2	Sample Input 3	Sample Mute State 3
Default	0V = Unmute	Pull-Down	0V	Unmuted	5V	Muted	Floating	Unmuted
Sample 1	0V = Unmute	Pull-Up	0V	Unmuted	5V	Muted	Floating	Muted
Sample 2	5V = Unmute	Pull-Down	0V	Muted	5V	Unmuted	Floating	Muted
Sample 3	5V = Unmute	Pull-Up	0V	Muted	5V	Unmuted	Floating	Unmuted

Note that the ATOM mute state can also be controlled through the M&C interface. The software mute setting takes priority over the hardware pin. Refer to **Section 2.5** for details.

RS-485 Port: Pins A, B, C, J, G

These five pins form a standard four-wire RS-485 serial port, with Rx+, Rx-, Tx+, Tx-, and serial port ground. Since communication with the ATOM is only half duplex, it is possible to deploy the ATOM on a two-wire RS-485 network by connecting the Tx+ & Rx+ and Tx- & Rx- wires together.

Tx+ and Tx- are the differential pair which carries a signal from the host computer to the unit. Rx+ and Rx- are the differential pair which carries a signal from the unit to the host computer. Connect these to the host computer RS-485 port accordingly.

RS-232 Port: Pins E, F, & G

These pins form a standard RS-232 serial port. Pin F carries a signal from the host computer to the unit and Pin E carries a signal from the unit to the host computer. Pin G must be connected to the ground pin on the host computer.

Ethernet Interface: Pins E, F, H, & K

These four pins form a standard 10/100Mbps Ethernet link. **Table 2-5** and **Figure 2-10** summarize how to construct an Ethernet M&C cable to access the web interface.

Table 2-5: Ethernet Cable Pinout

ATOM Connector	Twisted Pair Cable	RJ-45 Connector	Description
F	**Wht/Grn**	**1**	Ethernet host computer Tx+ signal (signal into unit)
K	**Grn**	**2**	Ethernet host computer Tx- signal (signal into unit)
E	**Wht/Org**	**3**	Ethernet host computer Rx+ signal (signal out of unit)
-	**Blu**	**4**	-
-	**Wht/Blu**	**5**	-
H	**Org**	**6**	Ethernet host computer Rx- signal (signal out of unit)
-	**Wht/Brn**	**7**	-
-	**Brn**	**8**	-

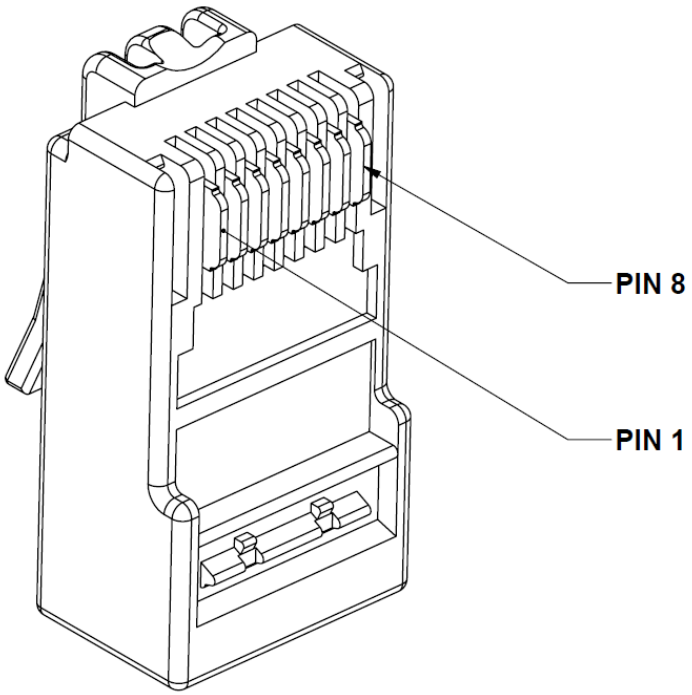

Figure 2-10: RJ-45 Plug Pinout

Section 2.5
SERIAL PORT SOFTWARE INTERFACE

Communications to and from the serial interface is character based. Use any standard "Terminal" program with setup parameters as shown in **Figure 2-11**.

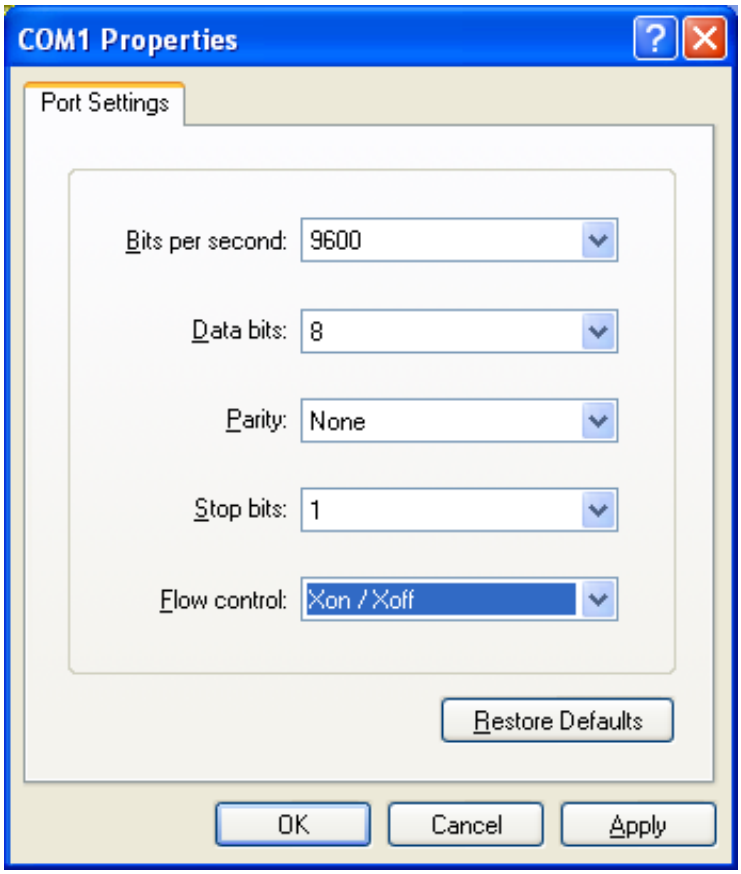

Figure 2-11: Setup Serial Port

CONTROLLER RESPONSES

The unit will only generate messages in response to a command. Each command received will result in a single message reply, which may simply be an Acknowledge message.

In general, command responses are returned immediately, though the precise command-response delay varies slightly based on the specific command.

MESSAGE DEFINITIONS

getident

This command returns the part number, software revision and serial number of the unit.

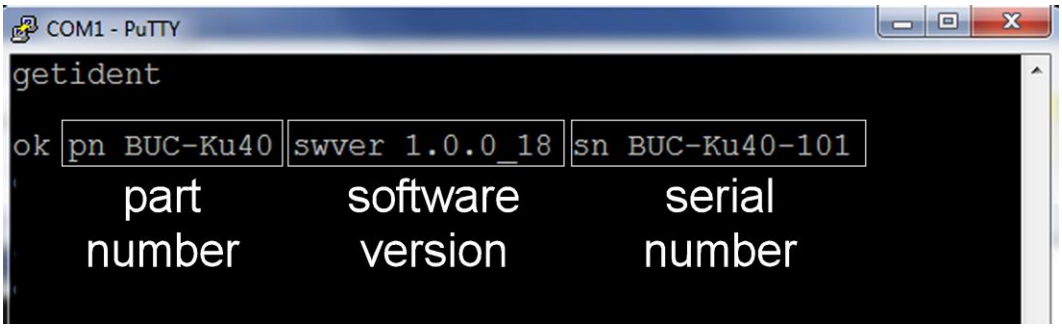

Figure 2-12: Command getident

getstatus

This command instructs the unit to respond with fault flag, forward power and temperature. Note: reverse power, “revpwr”, in the response is a future enhancement and is not currently supported.

- A “0” after “fault” indicates no faults. A “1” indicates a fault. Use command “getfaults” to determine what fault exists.
- Power is in dBm.
- Temperature is in degrees C. The temperature scale is from –40 to 125 C, with approximately +/- 2 degrees C accuracy.

Figure 2-13: Command getstatus

getfaults

This command gets the status of the mute, over temperature and pll loss of lock.

For mute, “0” indicates the unit is in an unmuted state. A “1” indicates a muted state. Note that a “1” does not necessarily indicate an error as the unit could have been commanded into a mute state (see “setmute” command).

For over temp and pll, a value of “0” means no error and a value of “1” indicates an error.

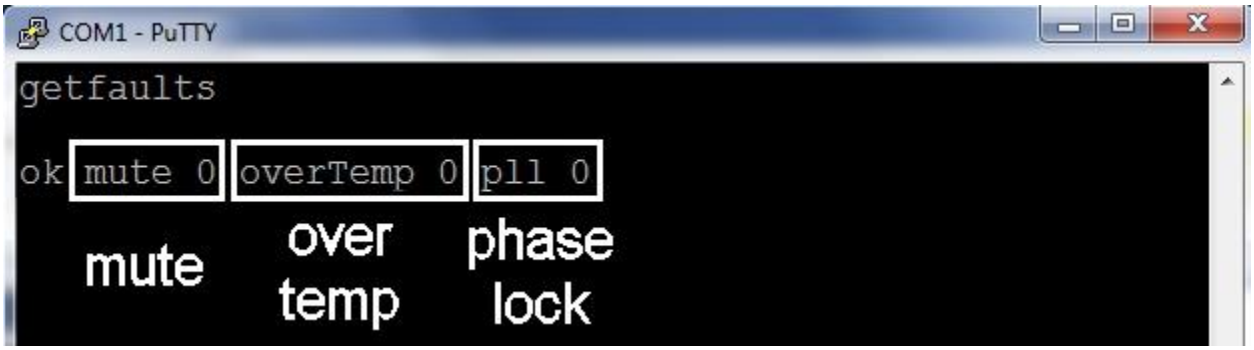

Figure 2-14: Command getfaults

resetfaults

This command clears faults under certain conditions. Note that the “mute” fault code indicates muted state, not necessarily an error. Since the unit can be commanded into mute state, without a fault, the “resetfaults” command will not clear a mute fault in this situation.

The temperature sensor has a trip point (above which a fault is triggered) and a reset point (below which a fault is automatically cleared.) The reset point is set below the trip point to provide hysteresis. See **Table 2-6** for Trip and Reset Points.

The **resetfaults** command will clear an overtemp fault which has been tripped if the unit is currently below the trip point. If the fault mode sensor value is above the trip point, the fault cannot be cleared. Some faults may not have a reset point, and must be reset through the “**resetfaults**” command.

Table 2-6: Fault Trip and Reset Points

Fault Condition	Trip Point	Reset Point
Mute	N/A	N/A
Over Temperature	85C	75C
PLL Loss of Lock	N/A	N/A

Figure 2-15: Command resetfaults

setmute

This command sets the software mute state of the unit. If the command code is 1, the amplifier will be muted. If the command code is 0, the amplifier mute will be controlled as shown in Section **Mute Logic**. The mute state can be monitored by examining the MUTE code in the "getfaults" message.

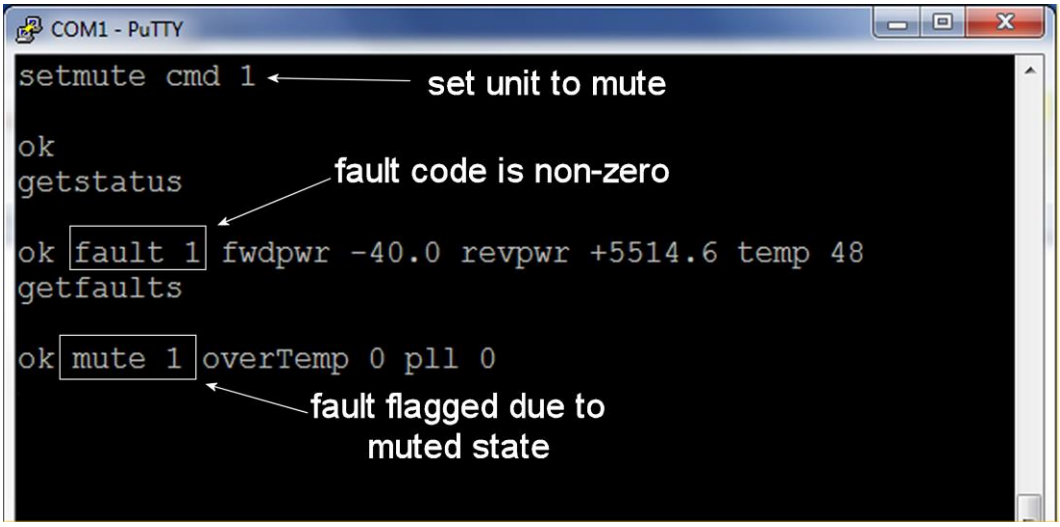

Figure 2-16: Command setmute - mute unit

Figure 2-17: Command setmute - unmute unit

COMMAND RESPONSE

The CLI operates on a command response format. Each time a command is entered, a response will be displayed. If a command executed correctly, an "ok" along with potential parameters and values will be displayed. Otherwise, "err" will be displayed along with a description of the error.

The potential errors that may be displayed are:

- Invalid Command – The command was not recognized
- Invalid Parameter – The parameter was not recognized
- Invalid Value – The value was invalid for the command/parameter
- Missing Parameter – A required parameter was not provided

Each command response will have the following format:

<CR><LF><msg><CR><LF>

where msg is as described above and in the commands summary and example tables below. Note that a response is enveloped by leading and trailing <CR><LF> characters.

Table 2-7: Commands Summary

Command	Param-Value Pairs	Response Format (enveloping <CR><LF> characters not shown)
getident	None	**ok pn** <part#> **swver** <swver#> **sn** <serial#> where: <part#> = unit part number label <swver#> = software version label <serial#> = unit serial number label
getstatus	None	**ok fault** <fault#> **fwdpwr** <fwdpwr#> **revpwr** <revpwr#> **temp** <temp> where: <fault#> = fault flag, either 0 (no fault) or 1 (fault) . Use the getfaults command to determine the specific fault(s) <fwdpwr#> = forward power value, in dBm <revpwr#> = currently not used but reserved for reverse power <temp> = internal system temperature in degrees Celsius
getfaults	None	**ok mute** <mute_flag> **overTemp** <temp_flag> **pll** <pll_flag> where: <mute_flag> = 0 (unit unmuted) or 1 (unit muted) <temp_flag> = 0 (temp ok) or 1 (error - over temp condition exists) <pll_flag> = 0 (pll ok) or 1 (error – pll loss of lock)
resetfaults	None	**ok**
setmute	**cmd** (0|1) 0 = unmute 1 = mute	**ok**

MUTE LOGIC

The unit will be muted when any of the following conditions exist:

1. A software mute command is issued through the serial interface.
2. A mute command/signal is issued through the discrete SHUTDOWN line (**Pin D: Shutdown (i.e. Mute Control)**.
3. A fault condition exists.

Section 2.6
ETHERNET INTERFACE (ATOMCONTROL™ WEB INTERFACE)

On units equipped with the Ethernet option, an integrated HTTP Web Server allows the user to access a web based version of the ATOMControl software to control the unit. To access this application, an Ethernet link to the ATOM must be established. Refer to **Section 2.4** for cable connection details. Once the cable is fabricated, connect the Ethernet jack to the network (either through an Ethernet switch or directly to the host computer's RJ-45 port) and power on the ATOM unit.

DEFAULT IP ADDRESS

The default IP Address for the ATOM unit is ***192.168.77.30*** and default the subnet mask is ***255.255.255.0***. Ensure the computer's IP Address is on the same logical network and subnet as the ATOM unit (e.g. 192.168.77.XXX, where XXX is any number *except* "30").

ACCESSING ATOMCONTROL™ WEB INTERFACE

The ATOMControl™ Web Interface is accessed through any web browser such as Mozilla Firefox (recommended), Google Chrome, Opera, or Internet Explorer. To access the web interface, launch the web browser and type in the IP Address for the ATOM:

http://192.168.77.30/index.html

A simplified version of the ATOM Control software will load in the browser window.

USING ATOMCONTROL™ WEB INTERFACE

The Web Interface use and operation is identical to the ATOMControl interface. Refer to the ATOMControl Software Manual for instructions on how to use the web interface (Norsat document number INS001219).

CHANGING THE ATOM'S IP ADDRESS

The factory default IP address of the BUC is ***192.168.77.30*** but it can be user configured through the ***Network and Port Configuration*** webpage. To change the ATOM's IP Address, connect the ATOM as described above, launch a web browser, and then navigate to the following address:

http://192.168.77.30/index_conf.html

Specify the desired IP Address in the text boxes and then click on the "***Save Settings and Reboot***" button. Once the web server reboots, the Web Interface will be accessible through the new IP Address

http://<New_IP_Address>/index.html

WARNING: TAKE CARE TO RECORD THE NEW IP ADDRESS WHEN MAKING CHANGES.

RECOVERING THE ATOM'S IP ADDRESS

If the IP Address setting is lost, it is possible to determine it using one of the following procedures:

Serial Port Method (recommended method)

1. Connect the ATOM's RS-485 serial port to a computer using the appropriate adaptor and power on the ATOM.

2. Launch ATOMControl, connect to the ATOM (refer to ATOMControl Manual), and select the "Custom Commands" tab. Alternatively, a terminal program may be used with the correct settings (refer to the **Figure 2-11: Setup Serial Port** for details).

3. Send the following command and the ATOM will respond with the IP Address

```
Tx: ns getipdata<CR>
Rx: ATOMWEB IP:192.168.0.145 MASK: 255.255.255.0<CR>
```

4. Follow the instructions in the preceding section to restore the IP Address to the desired setting.

Ethernet Method (alternate method)

5. Connect the ATOM's Ethernet port directly to a computer running Microsoft Windows and power on the ATOM.

6. Disable any wireless connections (if present).

7. Launch a command prompt window (**Start**>**Run**>**cmd**)

8. Type in the following command and press the carriage return key:

```
Tx: arp -a <cr>
```

9. A list of all Ethernet devices connected to the computer will be displayed. In this case, the ATOM Ethernet web server should be the only device listed in the summary.

10. Follow the instructions in the preceding section to restore the IP Address to the desired setting.

Section 2.7
J4 – RF OUTPUT

The RF output port is WR28 waveguide flange. The unit is supplied with screws (four 4-40x3/8"); it is the user's responsibility to ensure that the appropriate screw length is used. There should be at least 4 threads of engagement (0.1") with the holes in the waveguide flange.

The waveguide output port should not be relied upon to act as a mechanical support for the unit. Refer to **Appendix A** for the size and position of the ATOM mounting holes.

Section 2.8
GROUND CONNECTION

The unit is supplied with a #10-32 screw and internal tooth lock washers for grounding purposes. It is highly recommended that the unit be grounded according to national and local electrical codes before use.

Section 2.9
FAULT INDICATOR / LED

DESCRIPTION OF OPERATION

Norsat Ka 25W and 50W BUC's and SSPA's devices are equipped in a general purpose Status LED signal. This signal is intended to give a visual aid of the status of the device.

MODES OF OPERATION

The Status LED in the Front Panel of the devices will show three different statuses: **STARTING, FAULT, and NO FAULTS.**

STARTING WITH NO FAULTS STATUS

The Status LED will flash once for a lapse of approximately one second every time the power of the device in recycled to OFF and set back to ON. If no fault is detected in the device at the Power Up, the led will go to OFF afterwards settling in that state.

FAULT AND NO FAULTS

In the event of a **PLL Fault** or an **Over Temperature Fault**, the Status LED will turn ON indefinitely either the MUTE STATE of the device is UNMUTED or MUTED due Hardware or Software. If the cause of the fault disappears the Status LED will turn OFF until any of the Faults shows again independently of the MUTE STATE.

Chapter 3
Misc. Info

Section 3.1
ATOM INSTALLATION

MOUNTING

Depending on the configuration, an ATOM can weigh up to 7.3kg (16lbs). When choosing an installation location, ensure the mounting brackets are capable of supporting the unit weight. Norsat recommends that the unit is supported using at least eight of the mounting holes on two opposing sides (four holes per side). The waveguide output port (J4) must not be used to physically support the unit.

Refer to **Appendix A** for the size and position of the ATOM mounting holes.

OUTDOOR USE

The ATOM is designed for use in an outdoor environment and is sealed to prevent water ingress. Ensure the waveguide and/or feed connected to J4 are also sealed with gaskets to prevent water ingress.

Section 3.2
FANS & BASEPLATE COOLING

The standard ATOM configuration employs an integrated radiator and IP55 fans to cool the unit. A minimum clearance of 1 inch must be maintained around the air intake and exhaust during use. The fans are a field replaceable assembly; contact Norsat for details on replacement kits. If the unit is deployed inside a radome, ensure there is adequate cooling to remove heat and prevent the unit from overheating.

The ATOM is also available with a flat plate in place of the radiators and fans. It is the user's responsibility to ensure that the plate the unit is mounted to is capable of rejecting any heat produced by the unit. Please contact Norsat for cooling requirement specifications.

Section 3.3
ACCESSORIES

Each ATOM unit ships with mating connectors for the both M&C Port and the Power Port connectors as well as hardware for the waveguide flange and ground terminal. No hardware is provided to mount the unit.

A range of optional accessories such as pre-built power cables, M&C test cables, and M&C signal adaptors are also available; please contact Norsat for details.

Section 3.4
GENERAL SPECIFICATIONS

Table 3-1 summarizes general specifications applicable to most 25-50W ATOM units. Please refer to the specific ATOM datasheet available on the Norsat website for complete unit specifications.

Table 3-1: General 25-50W ATOM Specifications

Parameter	Specifications	
RF Power Output	25W* (44dBm*)	50W* (47dBm*)
Gain (min)	60dB *	60dB*
Operating Temperature with fans	-40°C to +60°C	
Storage Temperature	-50°C to +70°C	
Thermal Shutdown Temperature	90°C ±3°C	
Weight	2.4kg (5.4lbs) **	3.4kg (7.4lbs)**
Input Voltage (DC)	20 to 56 VDC	20 to 56 VDC
Power Consumption, DC BUC unit with fan (BUC)	285W	580W
Power Consumption, DC BUC unit with fan (SSPA)	275W	570W

* Frequency dependent
** Configuration dependent

Section 3.5
STANDARD WARRANTY

Norsat International Incorporated warrants that its equipment shall be free from defects in material or workmanship for a period of one (1) year from the ship date, unless otherwise stated in the Offer Terms and Conditions. The warranty does not cover units that have:

- been damaged through improper use or physical damage (e.g. dropped units)
- been modified, altered, or repaired by the user
- the security label(s) removed or damaged
- the serial number label removed or altered

To obtain warranty repair service, please contact Norsat **Technical Support** for any warranty claims.

Appendix A Mechanical Drawings

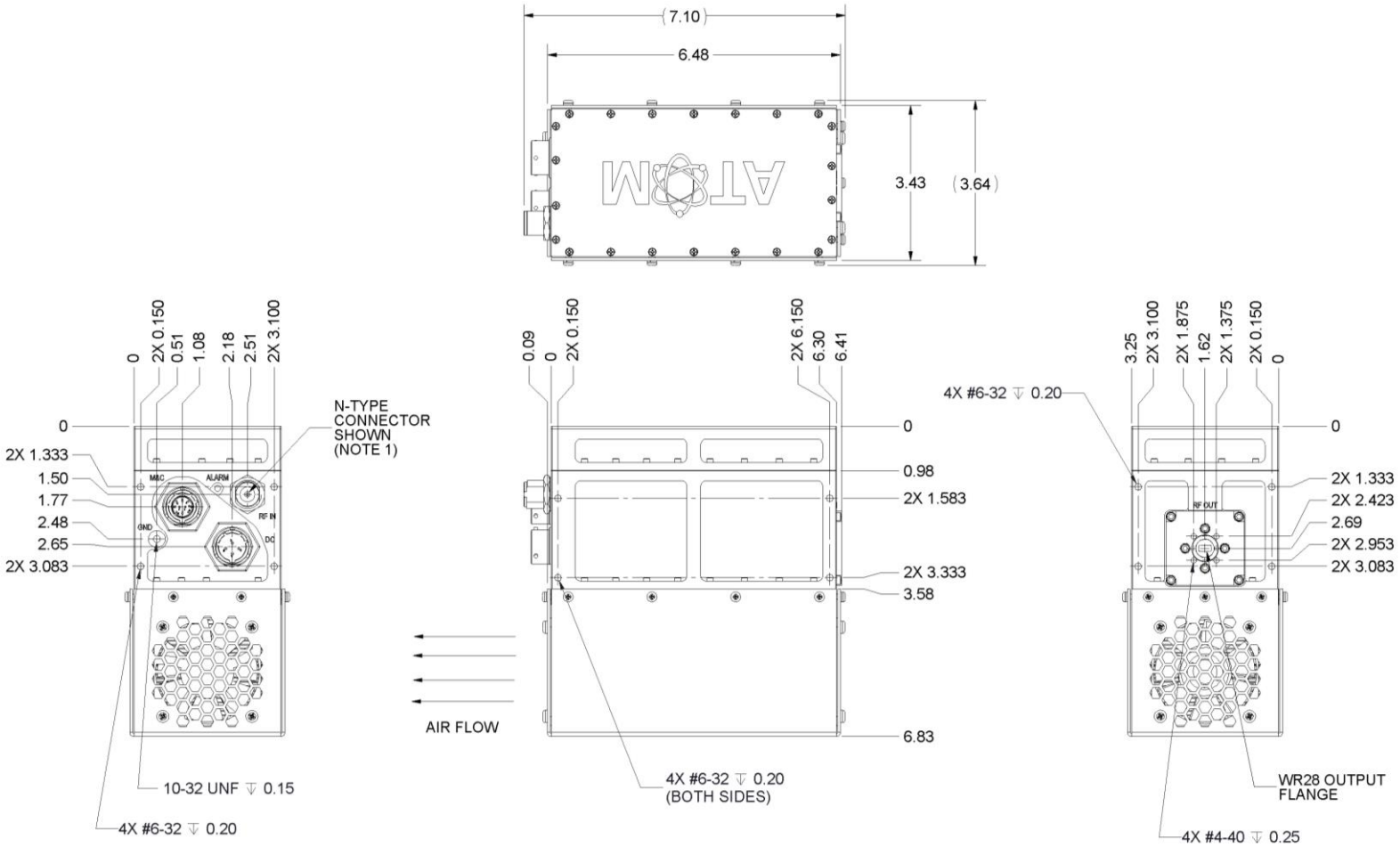

Figure A-3-1: 25W Ka BUC/SSPA, Fan Cooled

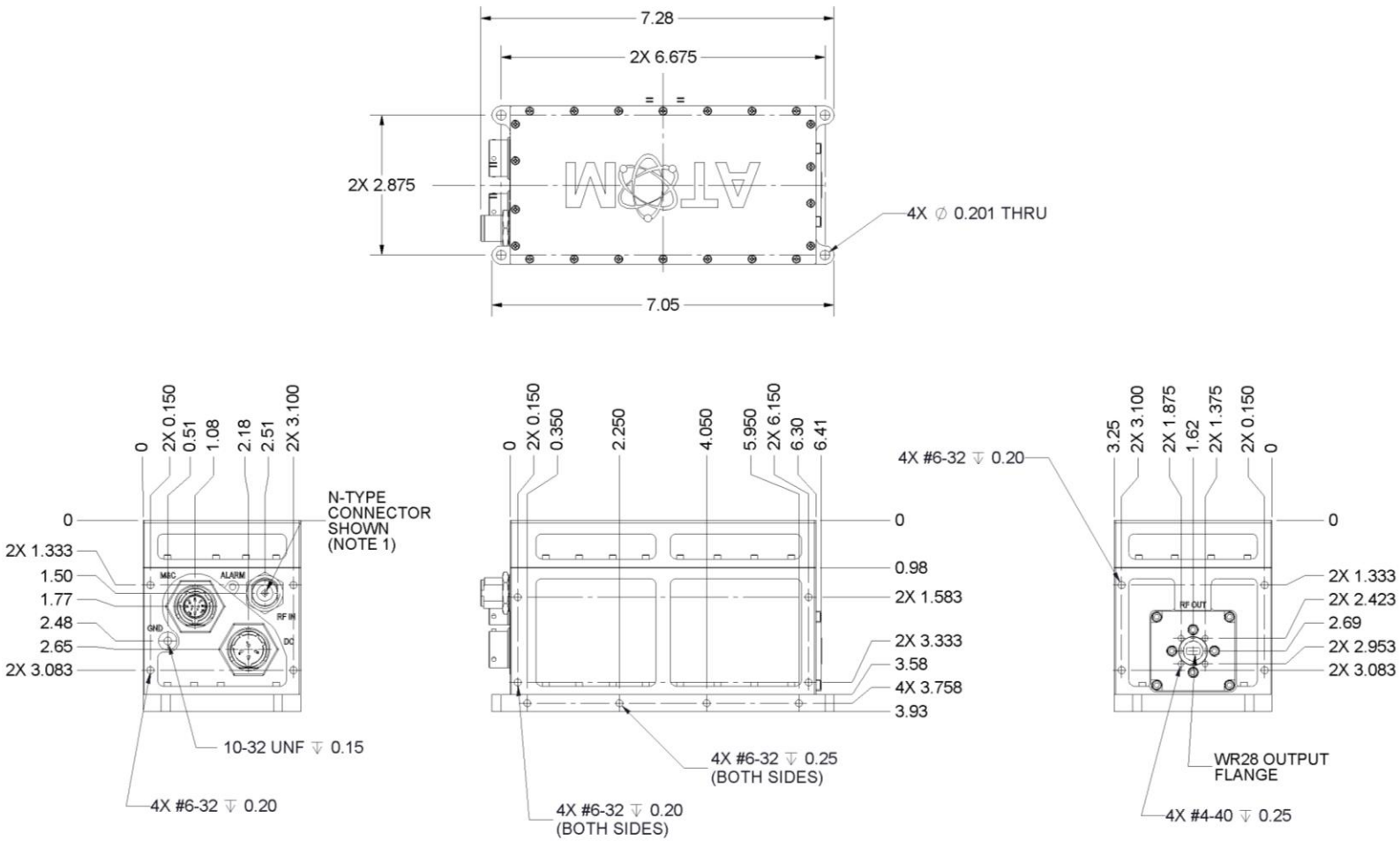

Figure A-3-2: 25W Ka BUC/SSPA, Baseplate Cooled

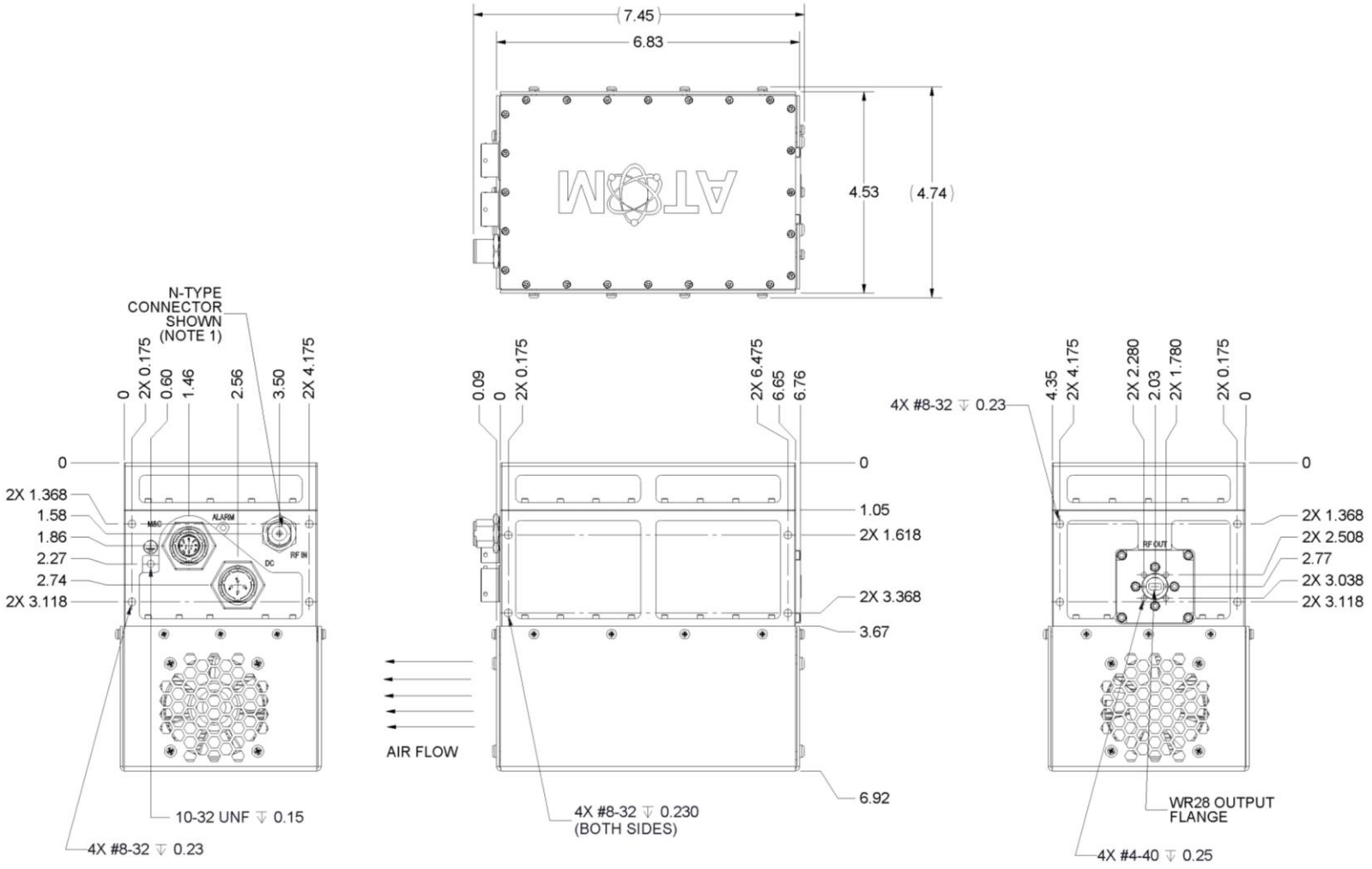

Figure A-3-3: 50W Ka BUC/SSPA, Fan Cooled

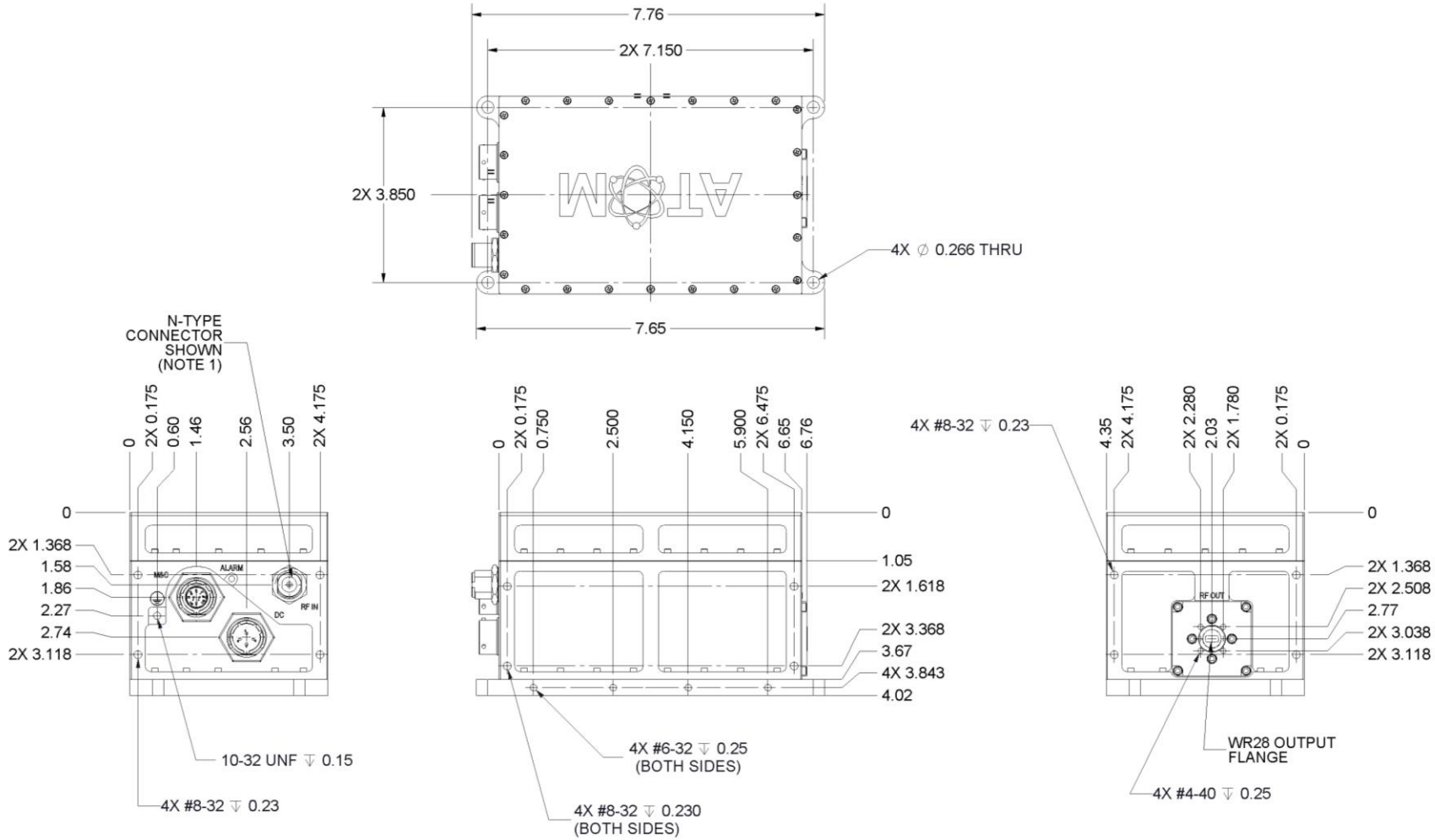

Figure A-3-4: 50W Ka BUC/SSPA, Baseplate Cooled

Note:

1. N-Connector Input Shown. For SSPA option, the N-Connector will be replaced with K-Connector.

Appendix B
Acronyms and Abbreviations

The following is a list of acronyms and abbreviations referenced in this document.

Table B-3-1: Acronyms and Abbreviations

Acronym	Definition
BUC	Block Upconverter
AMP	Amplifier
C	Celsius
<CR>	Carriage Return character (ASCII)
dBm	Decibel-milliwatts
DC	Direct Current
ESD	Electrostatic Discharge
freq	Frequency
GHz	Gigahertz
GND	Ground
IF	Intermediate Frequency
kHz	kilohertz
<LF>	Line Feed character (ASCII)
M&C	Monitor and Control
MHz	Megahertz
mm	Millimeter
N/A	Not Applicable
ppm	Pulses per minute
RF	Radio Frequency
RX	Receive
SSPA	Solid State Power Amplifier
TX	Transmit
V	Volt
VDC	Volts Direct Current