microSHIFT

SWORD Rear Der 2x and 1x Installation Manual

SWORD

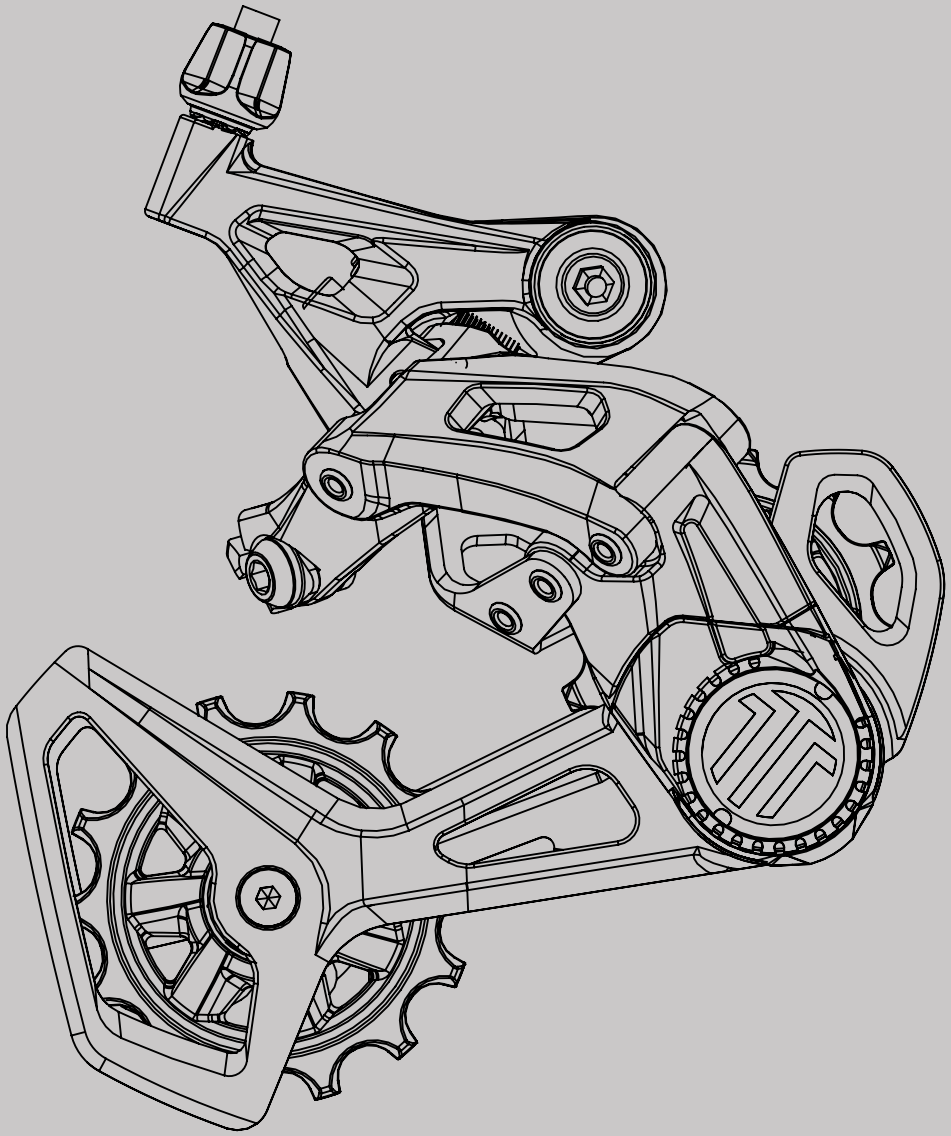

RD005-001
www.microSHIFT.com

Important Notice

REMINDER

Before installing the products, please read and understand the installation procedures. Improper installation can lead to premature product failures or even injuries. If you have any questions on how to install, please contact us or consult with a professional bicycle mechanic.

Tools and Supplies

1. Torque wrench
2. 4mm & 5mm Hex bits
3. Allen wrenches
4. Chain breaker
5. Cable cutter

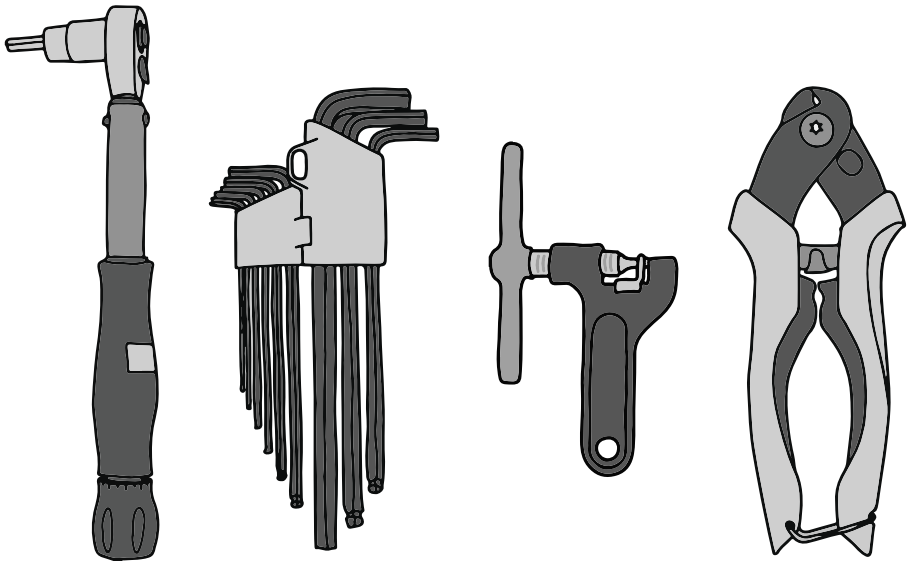

1. Rear Derailleur Attachment

Attach the rear derailleur to the bike. Make sure the **B-tension washer** is above the **derailleur dropout** and engages correctly with the **B-tension adjustment screw.**

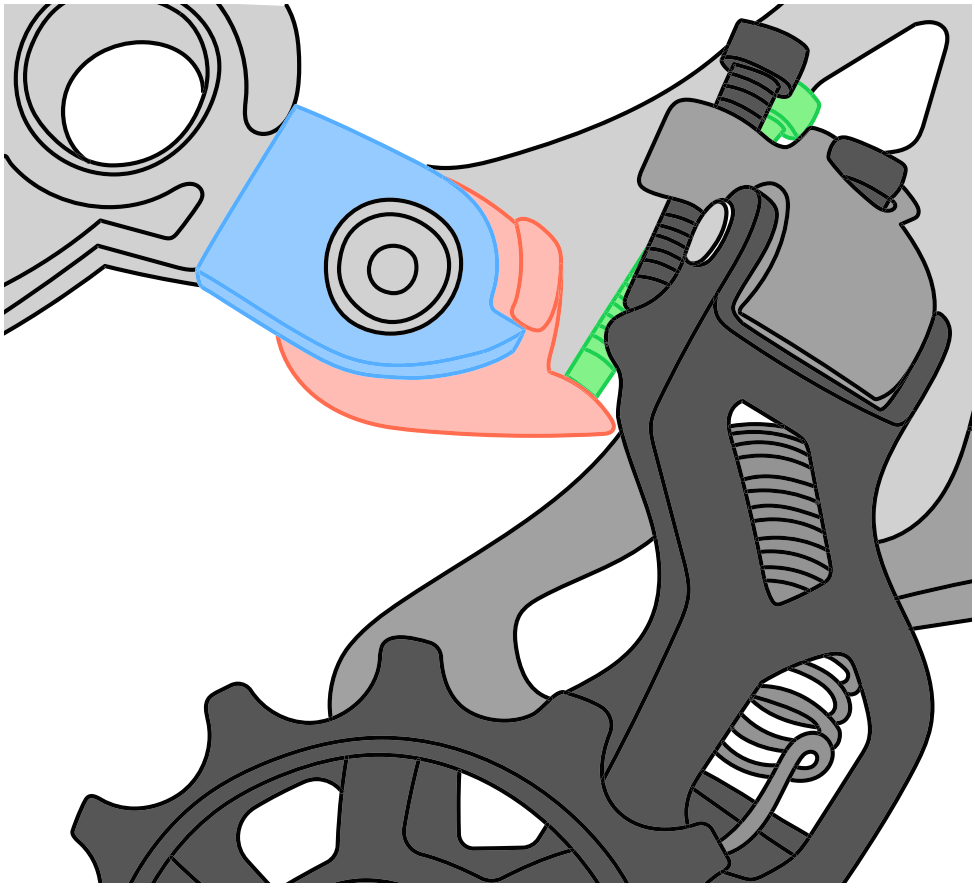

1. Rear Derailleur Attachment

Tighten the rear derailleur fixing bolt to **8-10 Nm** with a **5mm hex bit torque wrench.** Check to make sure that the derailleur can rotate freely.

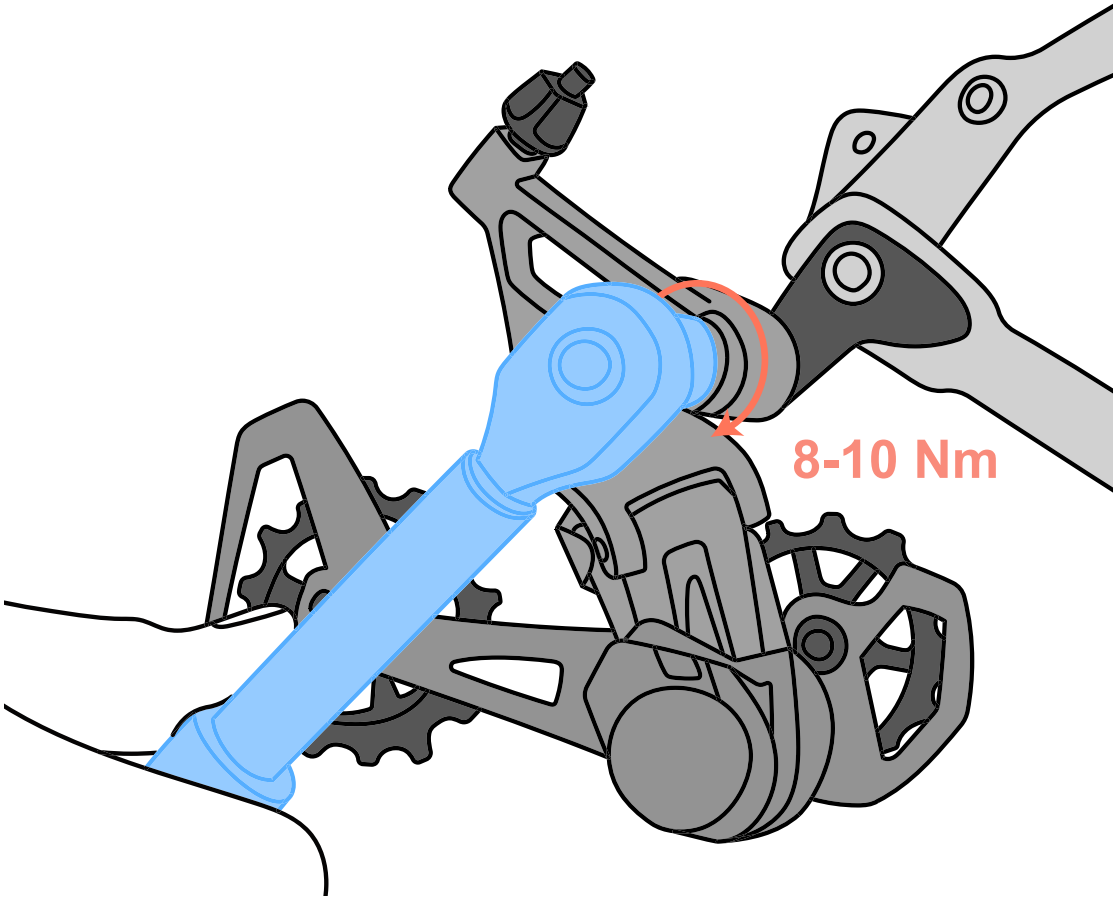

2. H-Limit Screw Adjustment

Adjust the **high-limit screw** until the guide pulley aligns with the outer edge of the smallest cog.

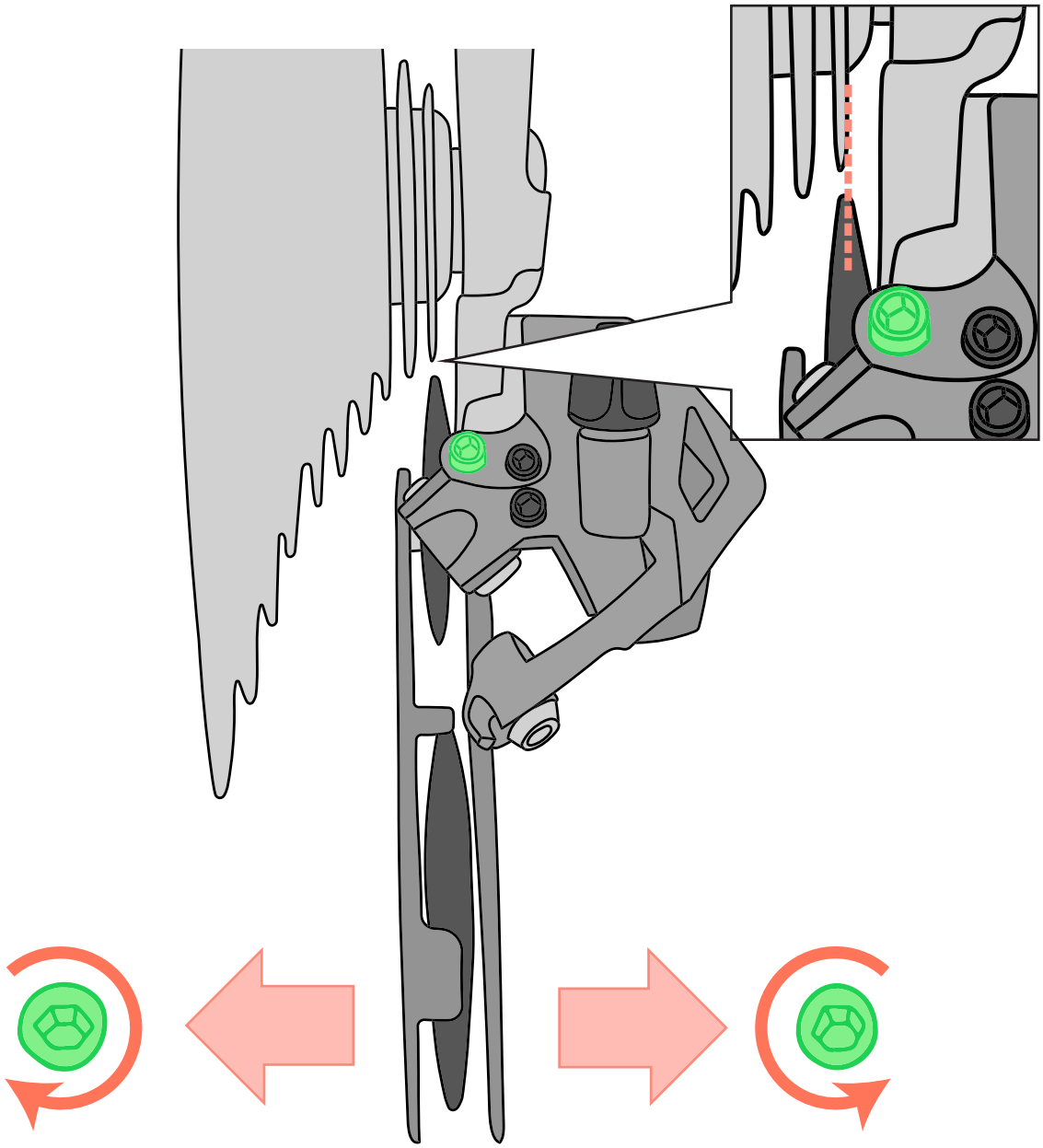

3. Proper Cable Housing

Every frame manufacturer has different cable routing guidelines, so make sure you consult those before cutting the housing. SWORD works best when there is not too much of a curve in the housing, and not too little slack either. Make sure the end of the housing is sitting against the rear derailleur as well.

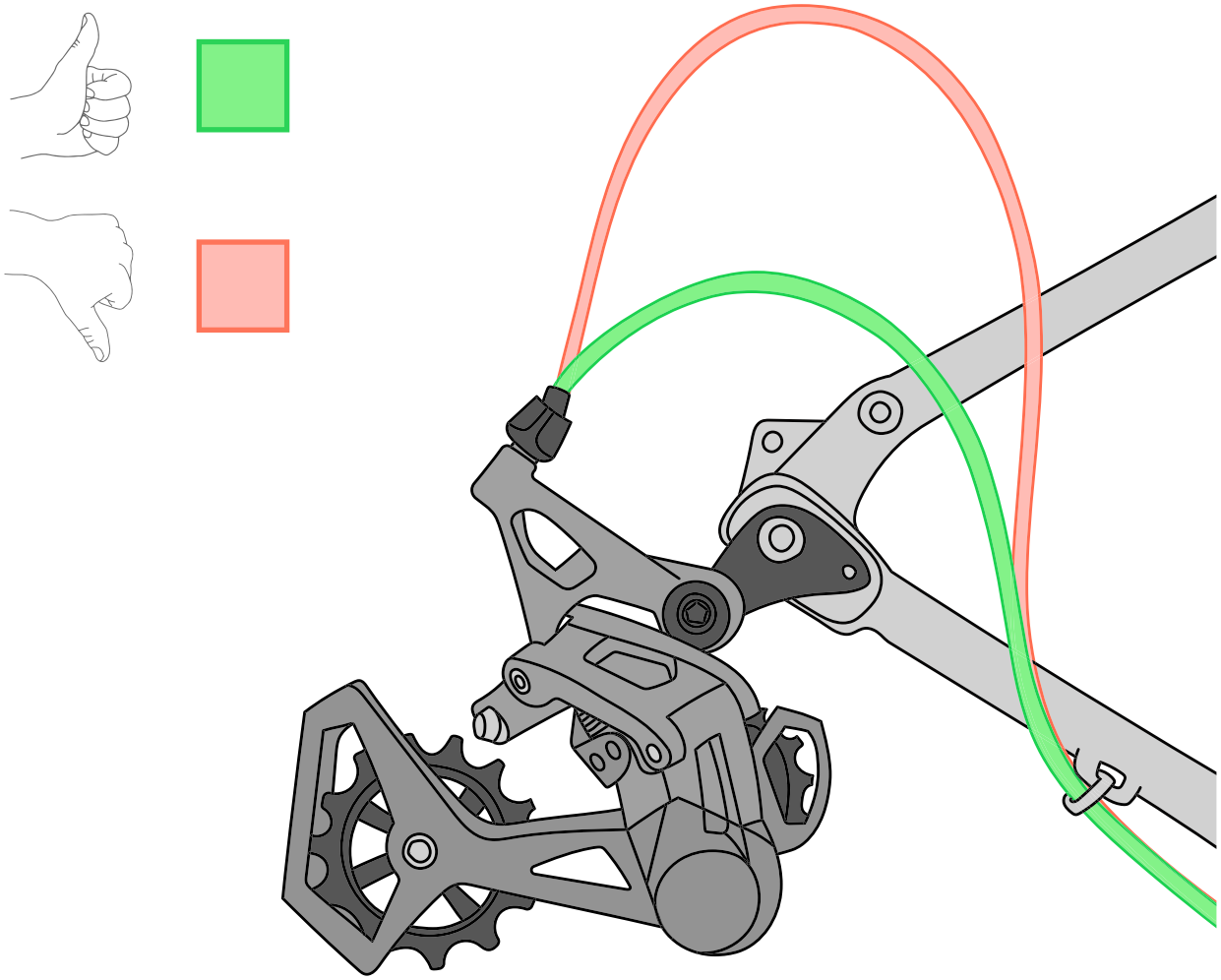

3. Proper Cable Housing

Part II

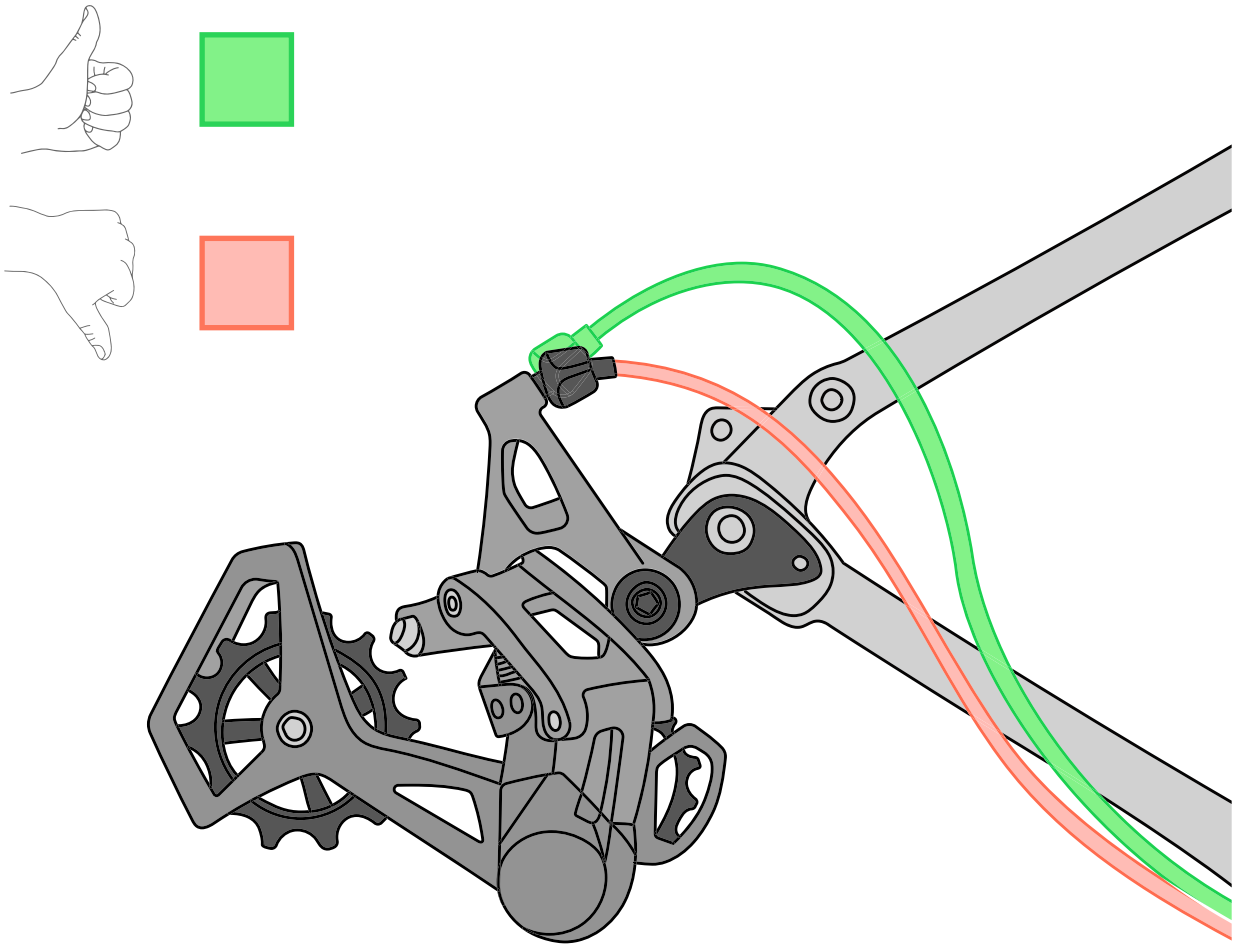

4. Cable Installation

Part I

Before installing the cable, use **the small shift lever** to shift to the highest gear.

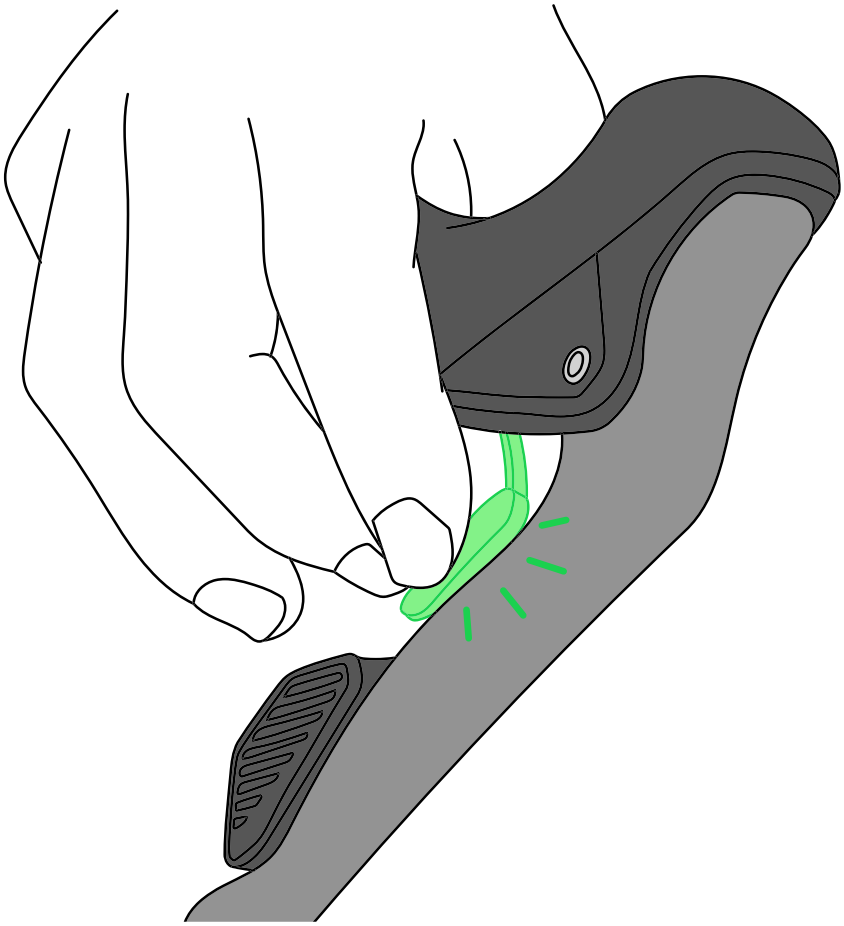

4. Cable Installation

Part II

Route the **cable** through the shifter, housing, and rear derailleur.

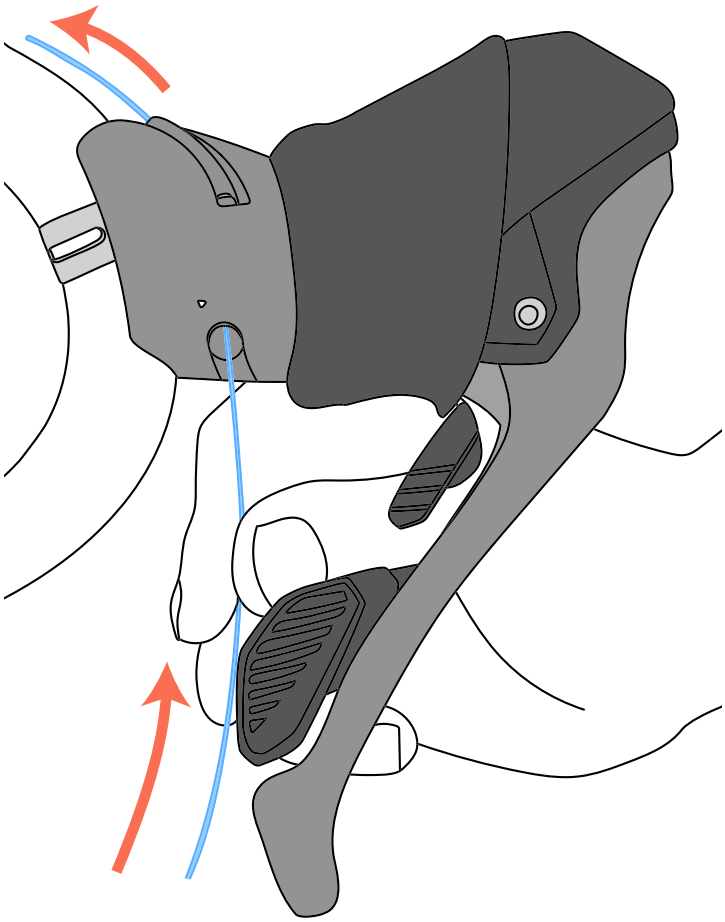

4. Cable Installation

Route **the cable** underneath the **cable fixing bolt** and washer. Make sure **the cable** is resting in the groove under the washer. Tighten to **5-7 Nm.**

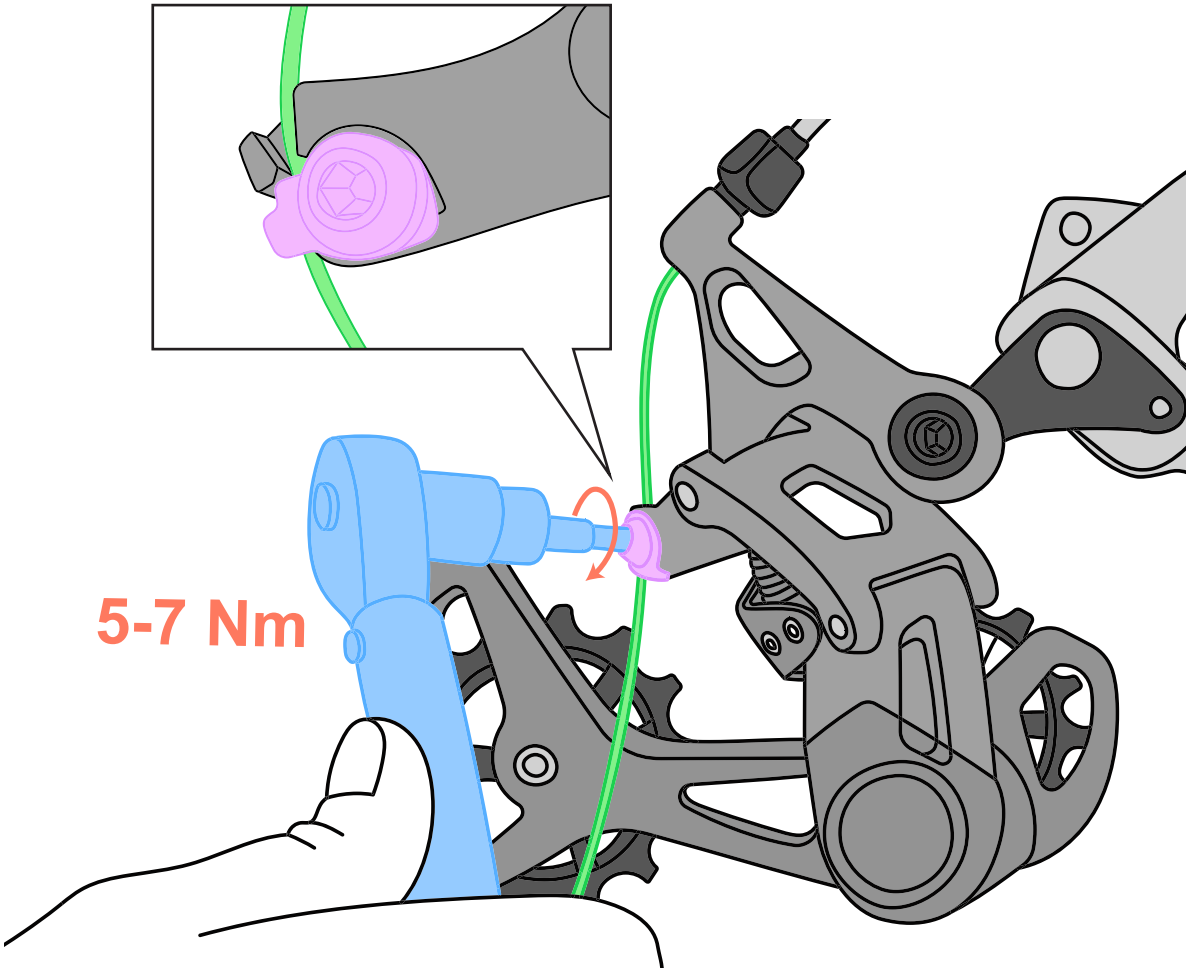

4. Cable Installation

Cut the cable and attach the **cable end.**

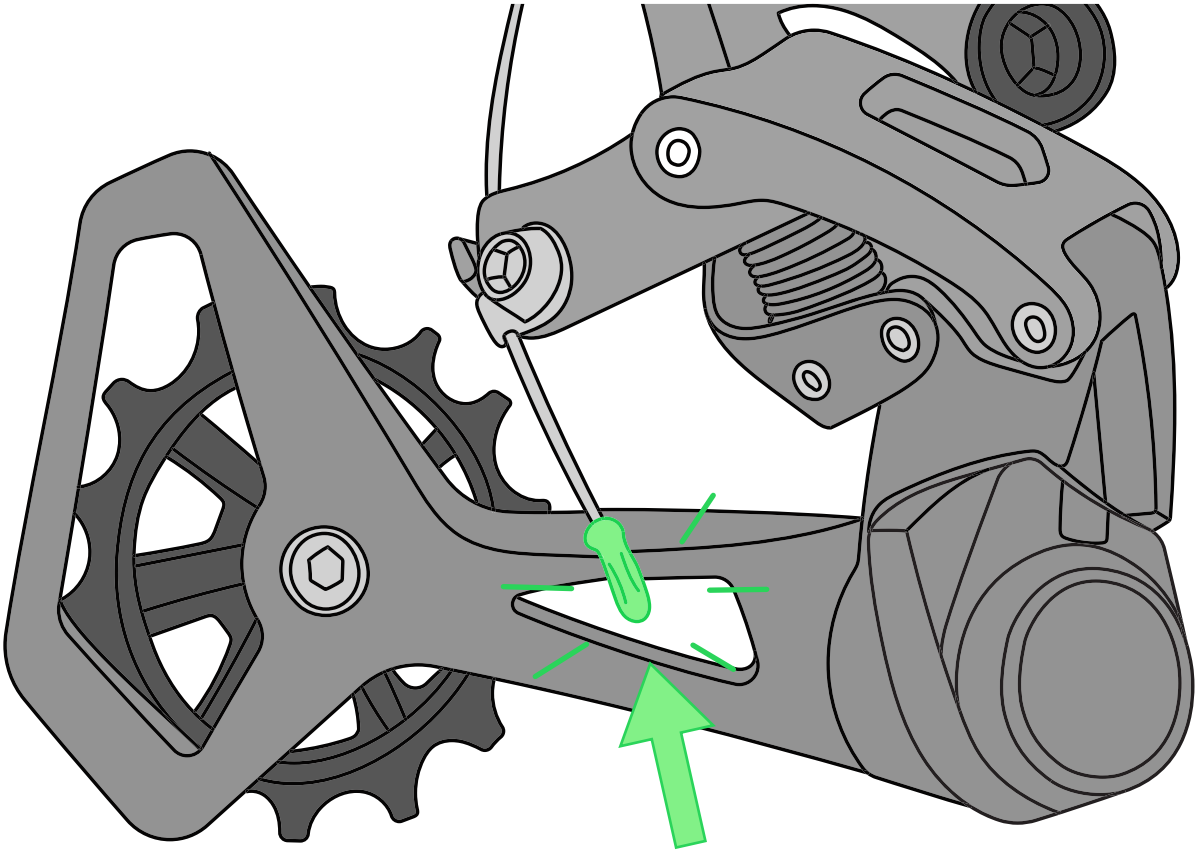

Turn the **clutch** to the off position by rotating the switch counterclockwise.

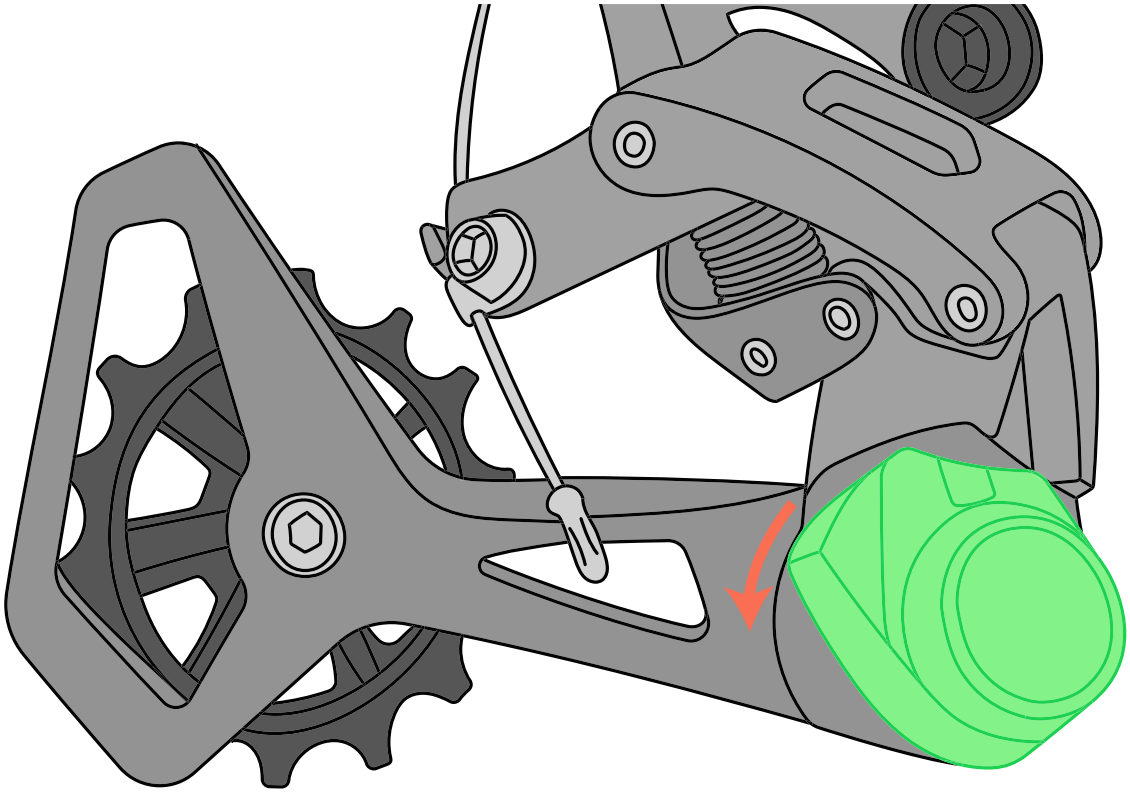

Full Suspension Bike Only

To properly size the chain on a full suspension bike, release air from the rear shock or remove the shock completely.

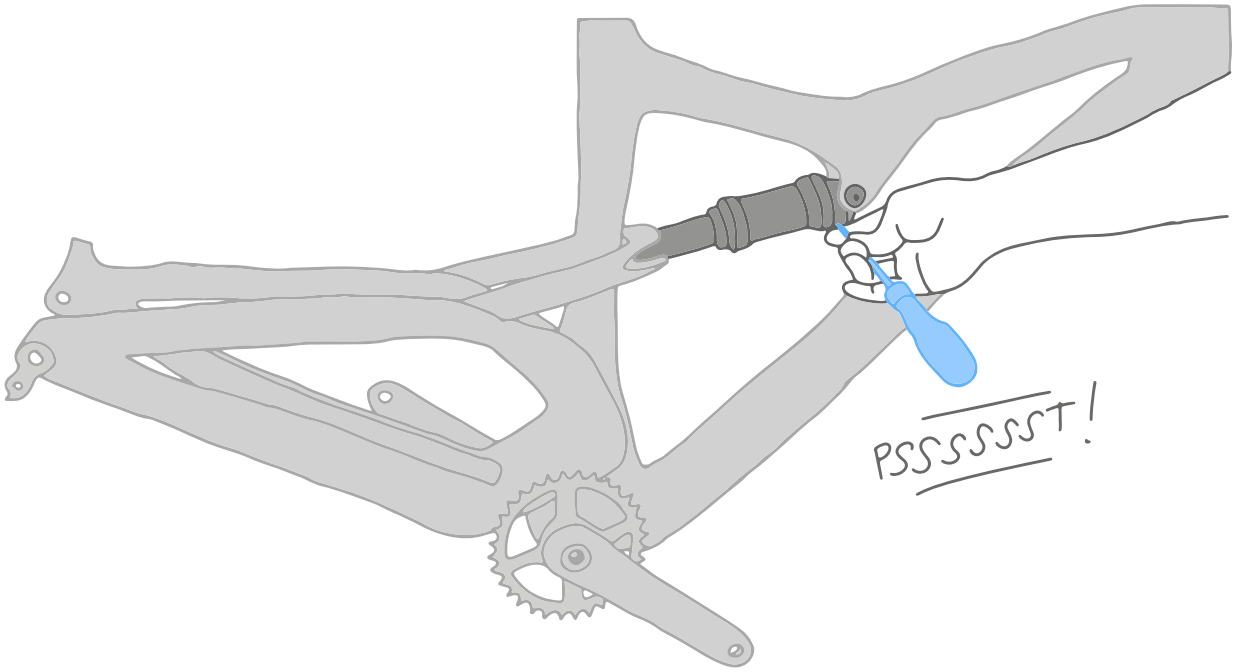

Full Suspension Bike Only

Move the rear axle up and down as you measure the distance between **the bottom bracket** and **the rear axle.** Find the position where they are furthest apart and perform the next step at this position.

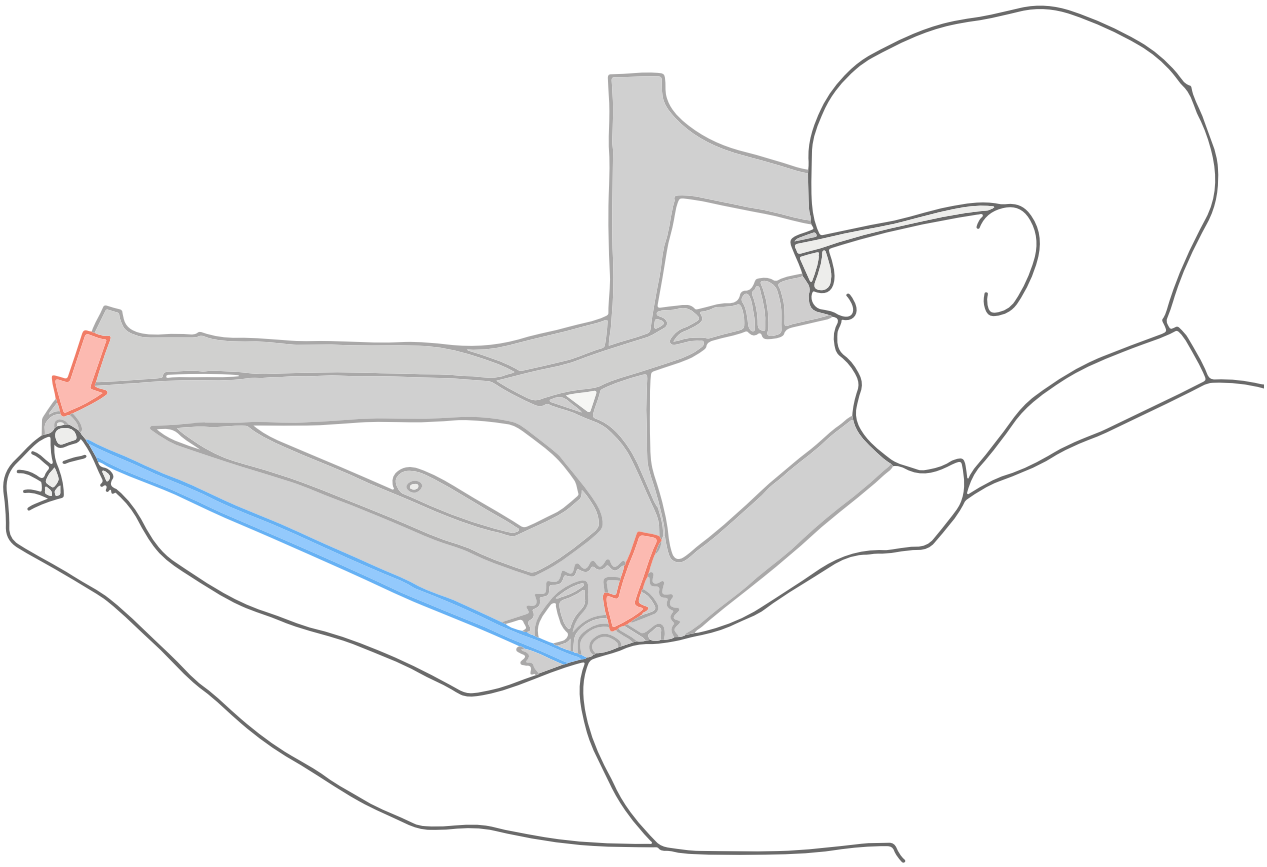

5. Chain Sizing

Wrap the chain around the chainring and the largest cassette cog without routing through the rear derailleur. Stretch the chain tight.

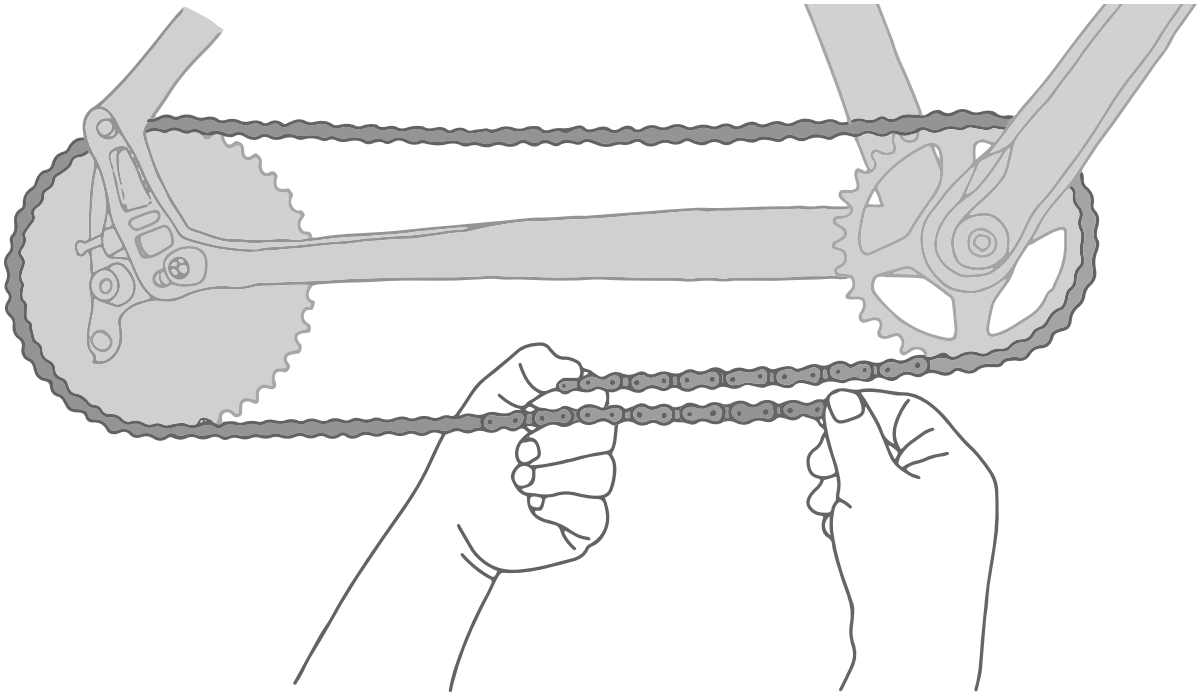

5. Chain Sizing

Place **two inner links** next to each other on the chainring. Add **two extra inner link** and **cut the chain there**.

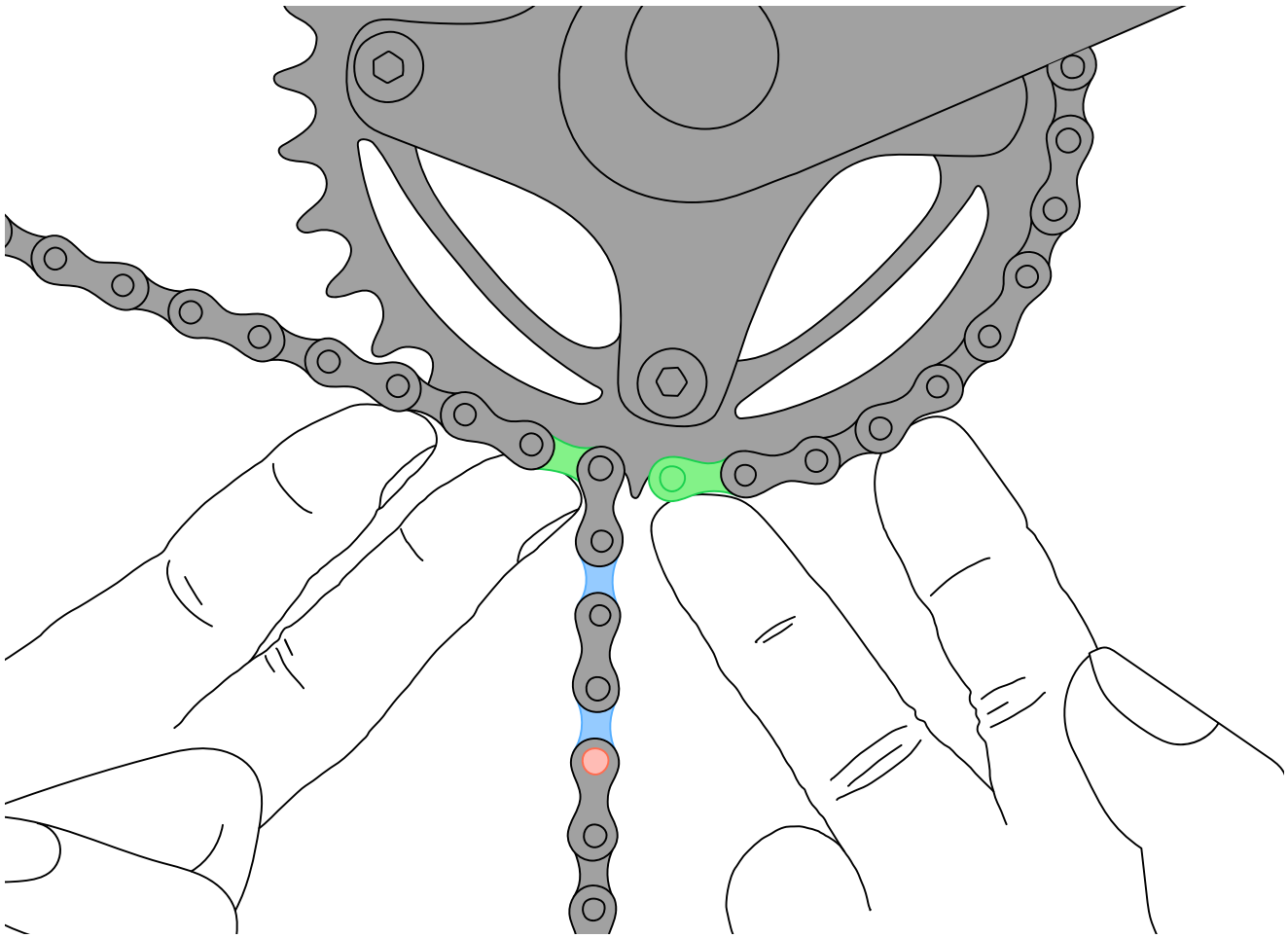

5. Chain Sizing

Cut the chain using a **chain breaker.**

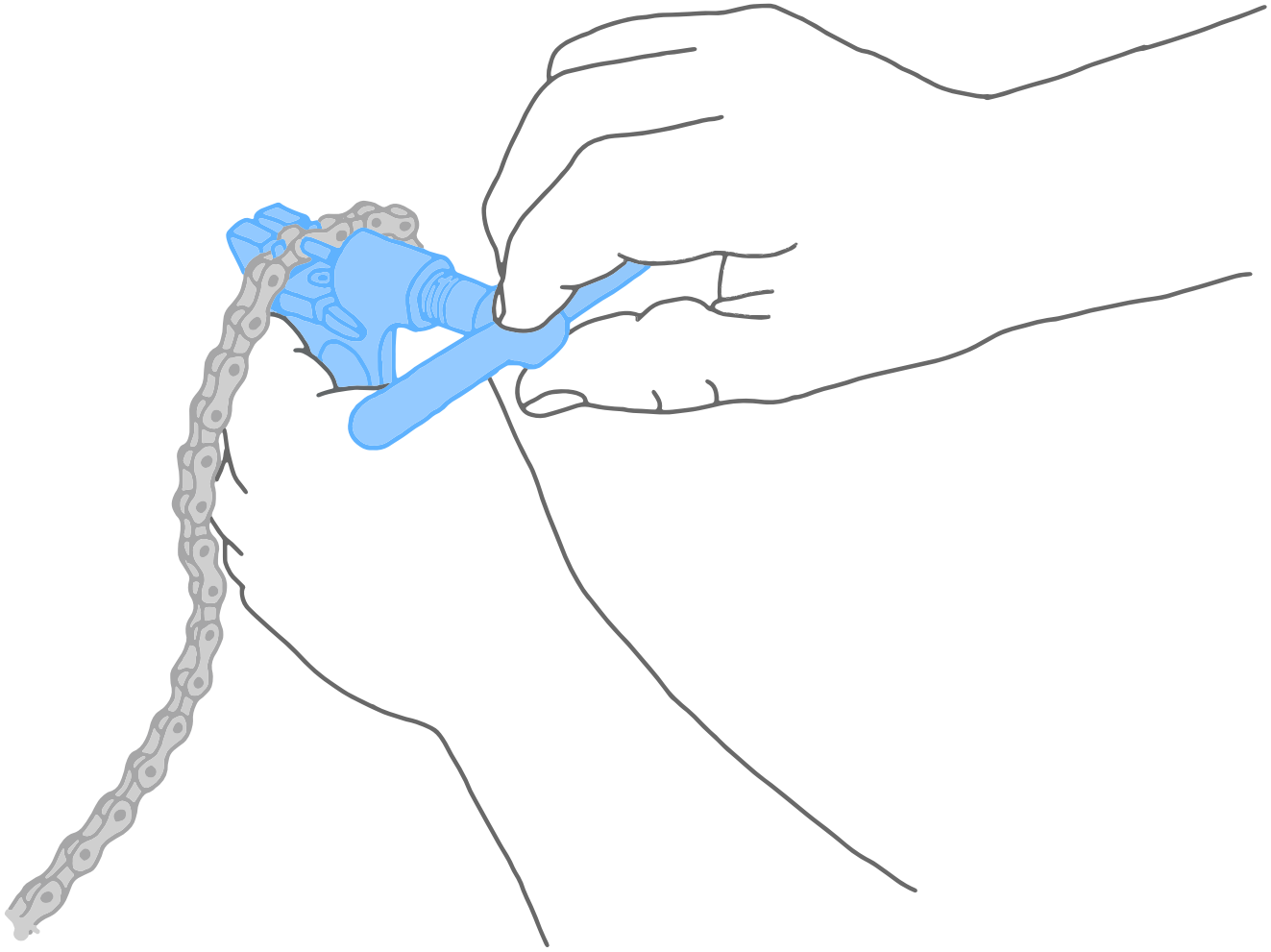

6. Chain Installation

Route **the chain** over the smallest cog, in front of the guide pulley, **behind the derailment prevention plate**, and behind the tension pulley. Wrap the chain around the chainring and connect the chain according to the chain manufacturer's instruction manual.

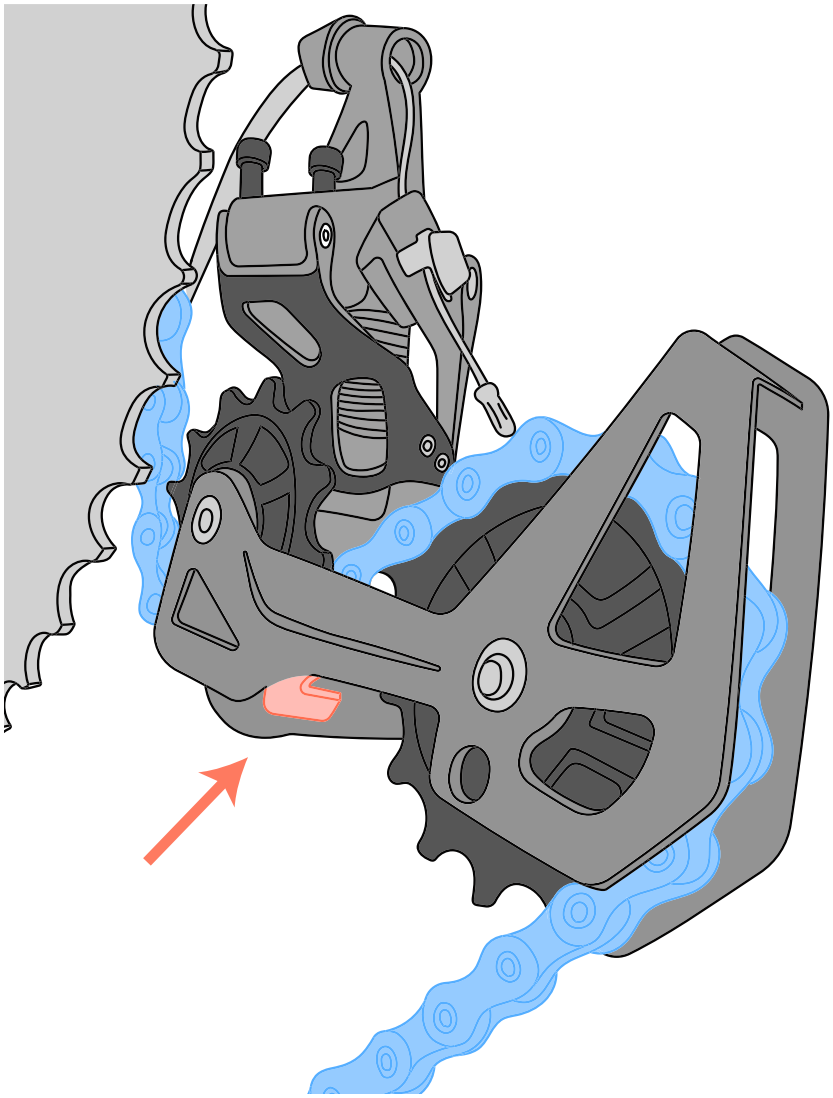

7. Shifting Adjustment

Before adjusting the shifting, enable the **clutch** by rotating the switch on the side of the derailleur clockwise.

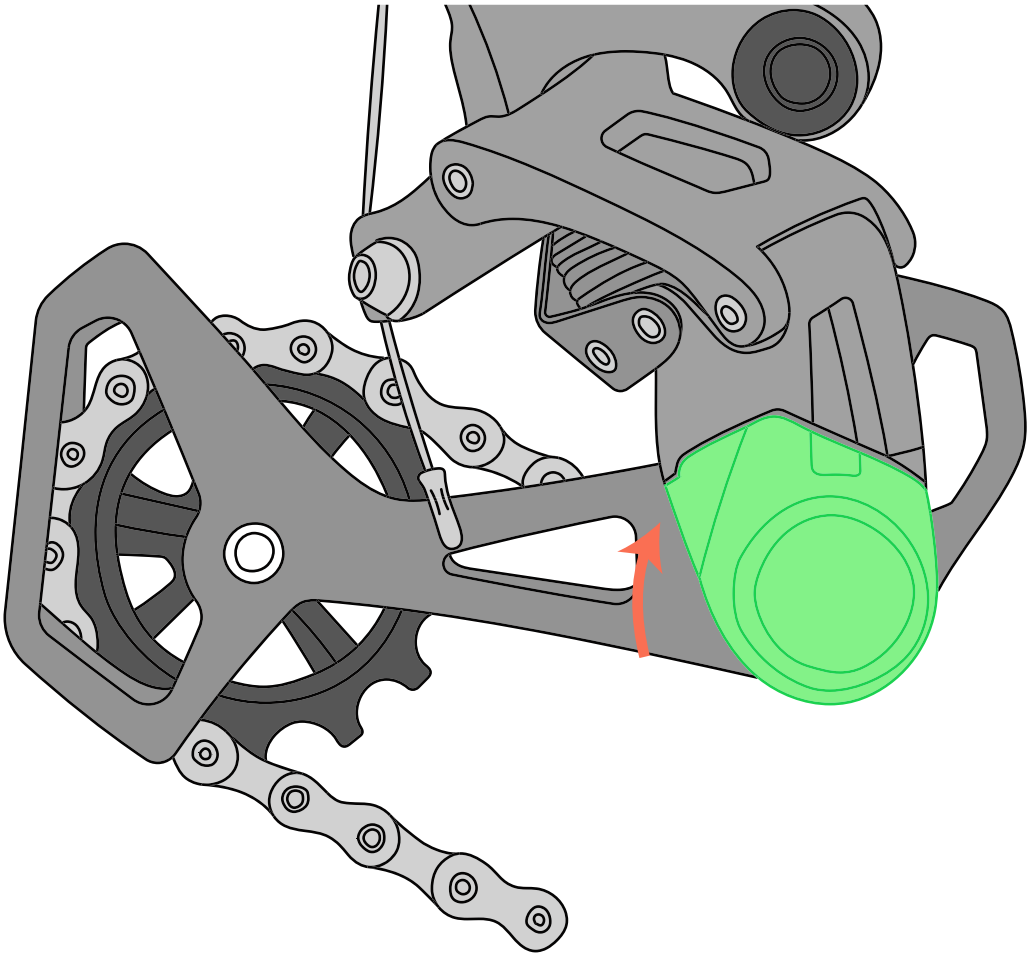

7. Shifting Adjustment

Shift from the smallest cog to the 2nd smallest cog by pressing the lower thumb trigger lever on the shifter. If the chain doesn't move, turn the **barrel adjuster** on the shifter counter-clockwise. Repeat until the derailleur shifts to the 2nd smallest cog.

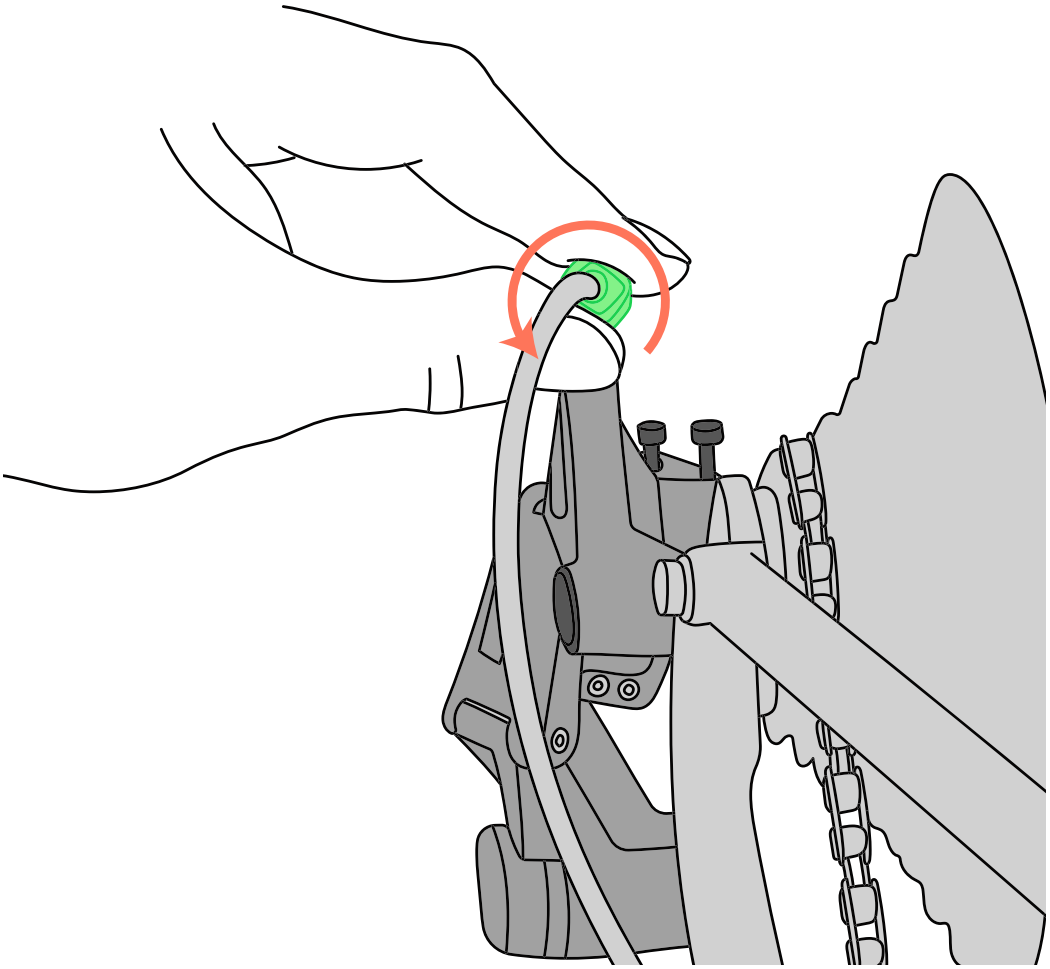

7. Shifting Adjustment

Now make several shifts up and down the cassette. If shifting is slow to move to a larger cog, turn the **barrel adjuster** counter-clockwise. If the shifting is slow to move to a smaller cog, turn the **barrel adjuster** clockwise.

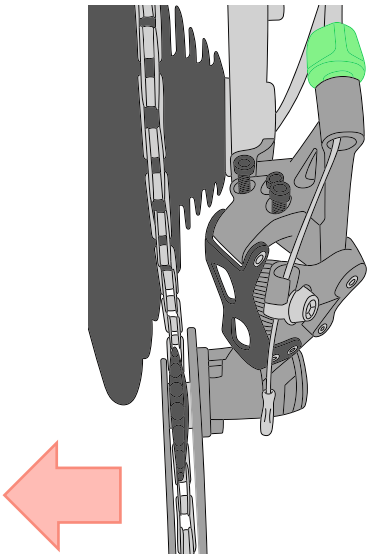

Slow to shift to larger cogs

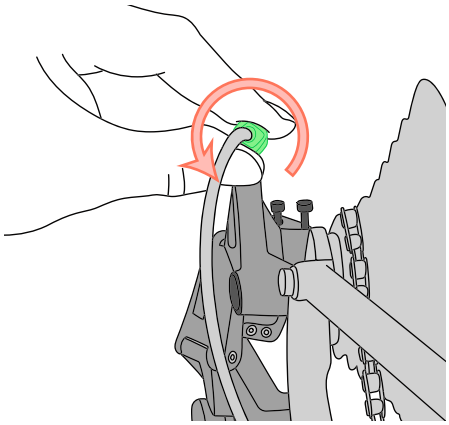

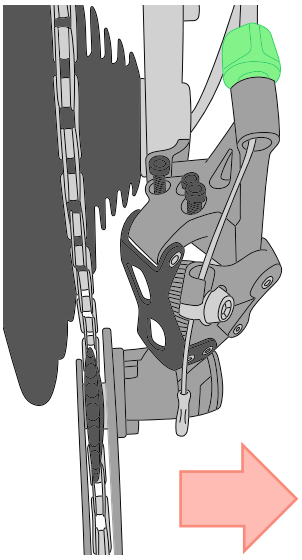

Slow to shift to smaller cogs

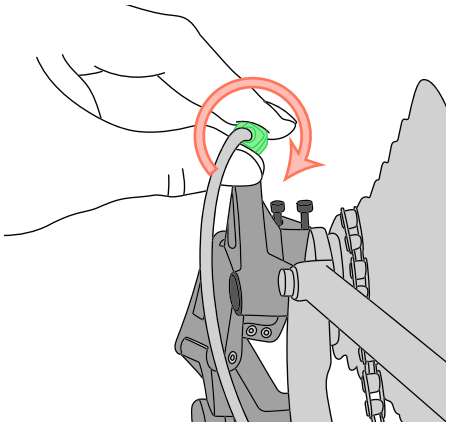

8. L-Limit Screw Adjustment

Shift to the largest cog on the cassette. Using your hand, try to push the rear derailleur past the largest cog. If the derailleur can move past the cog, adjust the **low limit screw**.

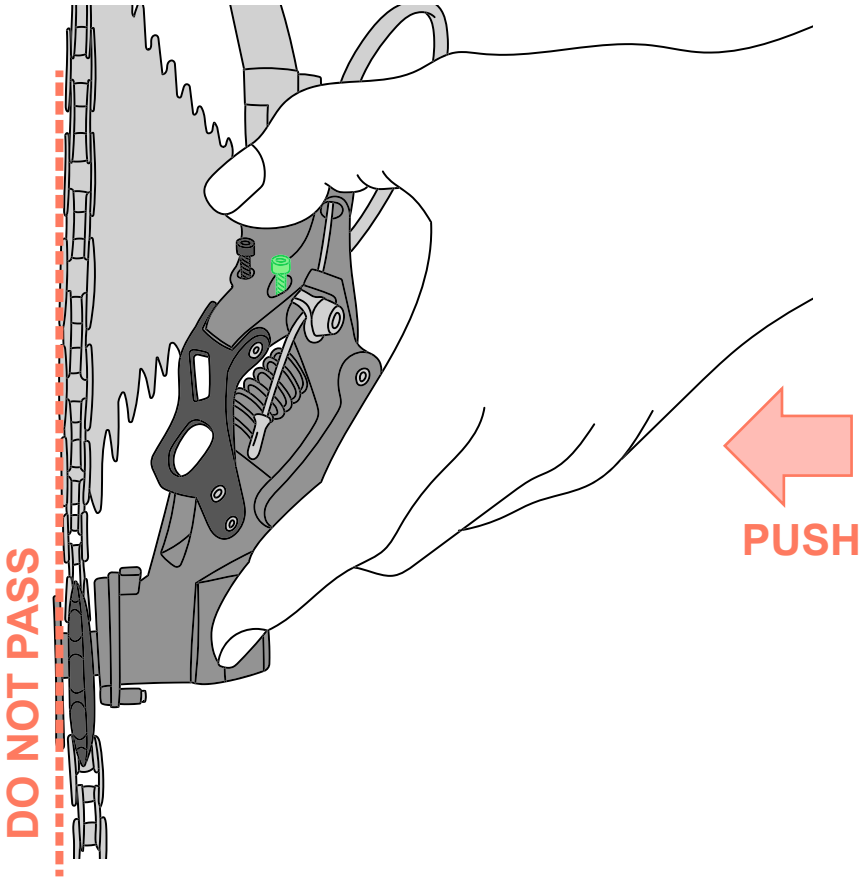

8. L-Limit Screw Adjustment

Part II

Tighten the **low limit screw** until you can't move the derailleur past the largest cog. Shift down and back up to the largest cog. If it is slow to shift to the largest cog, loosen the **low limit screw**.

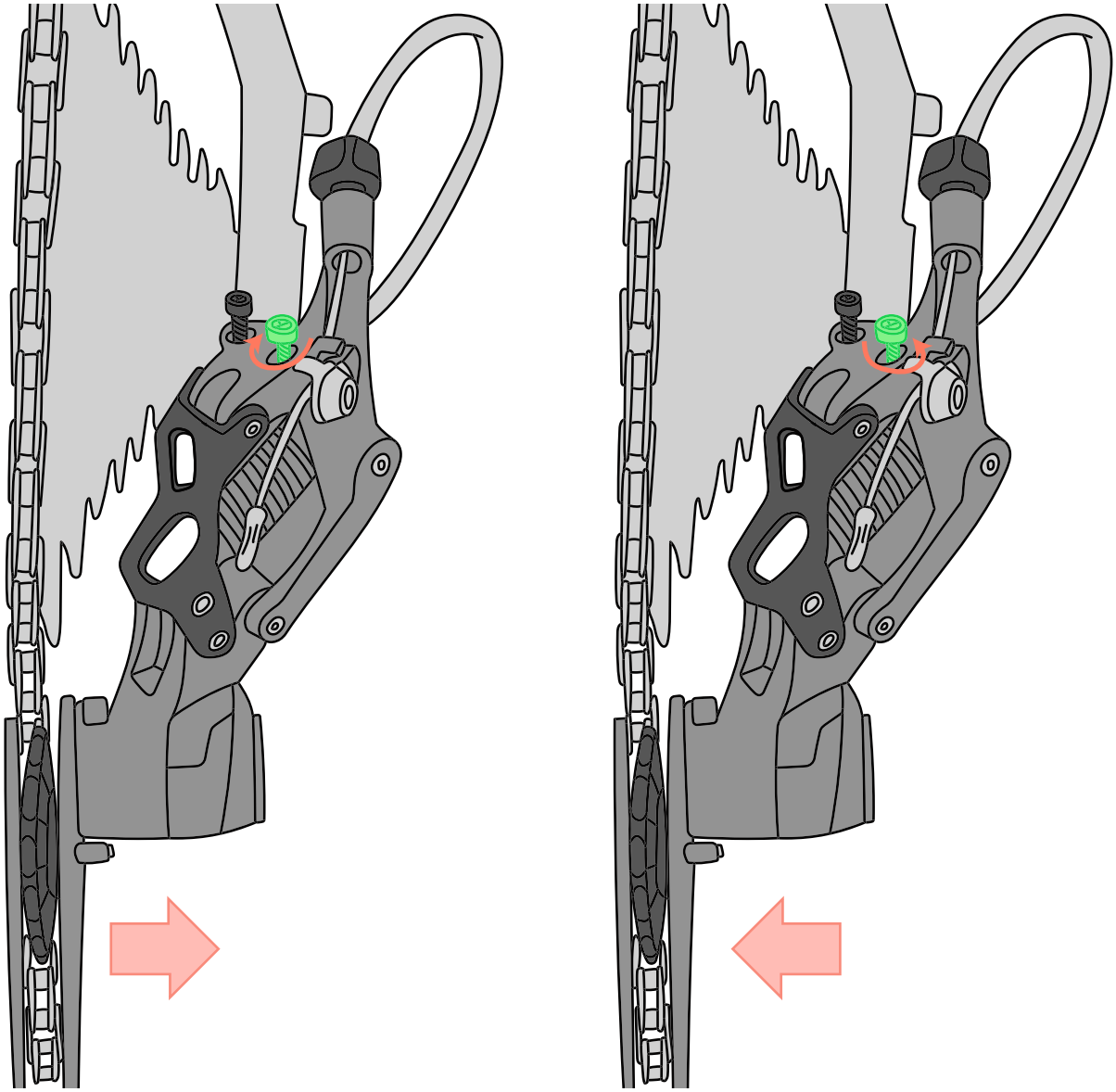

9. 1x B-Limit Adjustment

Part I

⚠ The SWORD 1x and 2x derailleurs have different B-tension adjustments. Identify your setup and adjust the B-limit screw accordingly. Using incorrect setup may damage the products or lead to poor shifting performance.

Use a ruler to measure the pulley gap between the **guide pulley** and the **tallest teeth of the largest cog**. Turn the B-tension screw to move the pulley further or closer to the cog. There should be a **4-6mm gap** between the guide pulley and the tallest tooth of the largest cog.

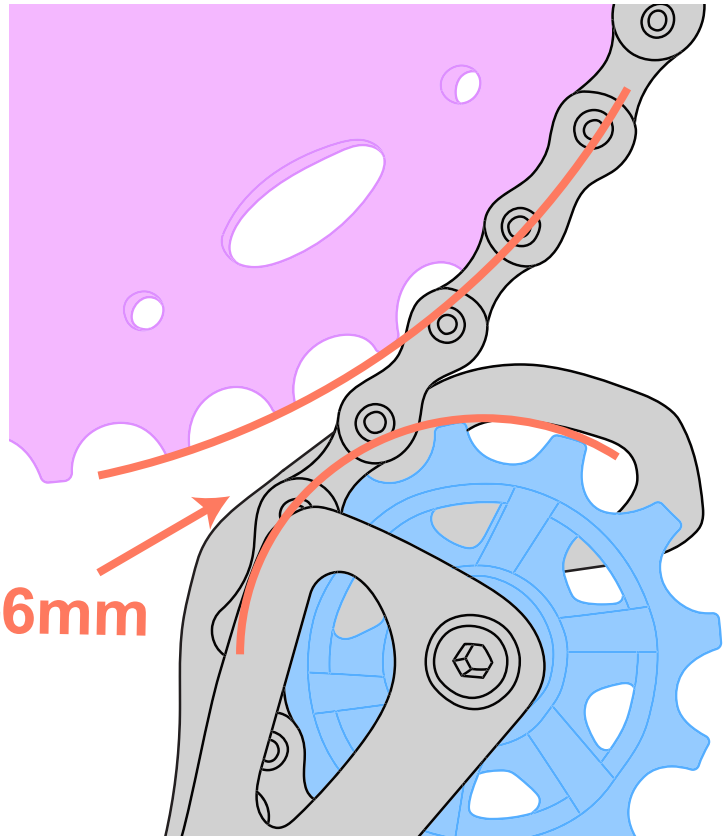

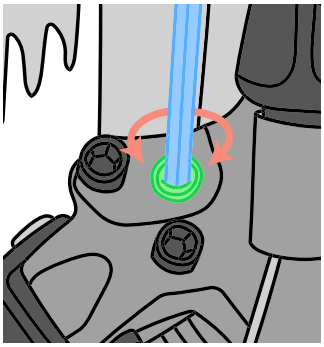

10. 2x B-Tension Adjustment

Part I

With the chain in the smallest chainring and largest cog, use a ruler to measure the pulley gap between the **guide pulley** and the **tallest teeth of the largest cog.** Turn the B-tension screw to move the pulley further or closer to the cog. There should be a **4-6mm gap** between the guide pulley and the tallest tooth of the largest cog.

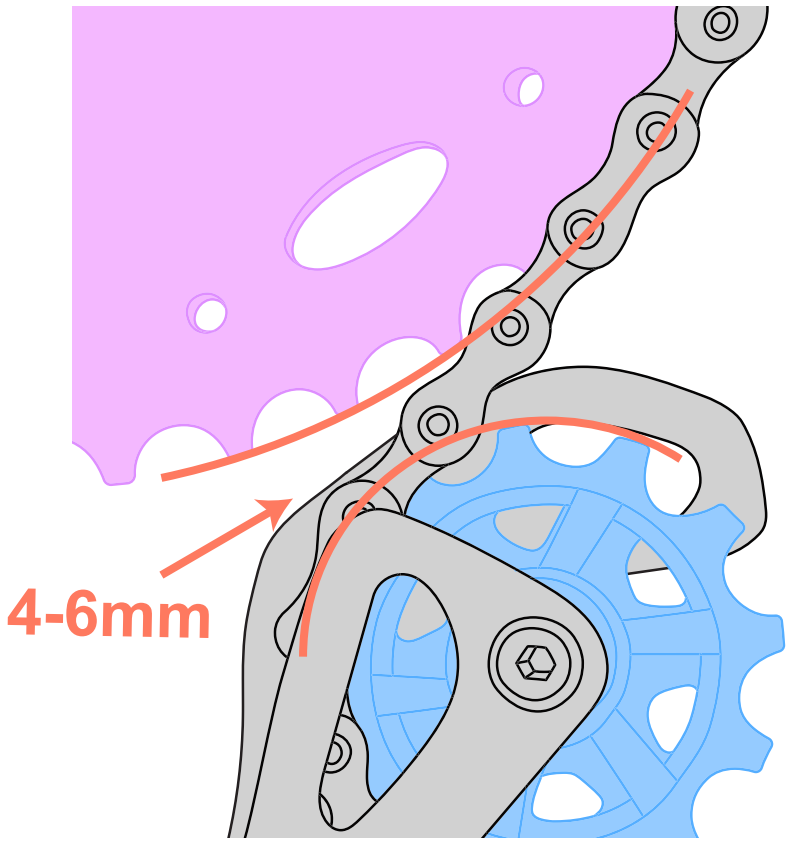

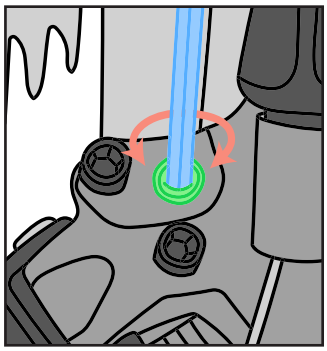

10. 2x B-Tension Adjustment

Part II

While still in the small chainring, shift to the smallest cog.

Check for slack in the **chain.**

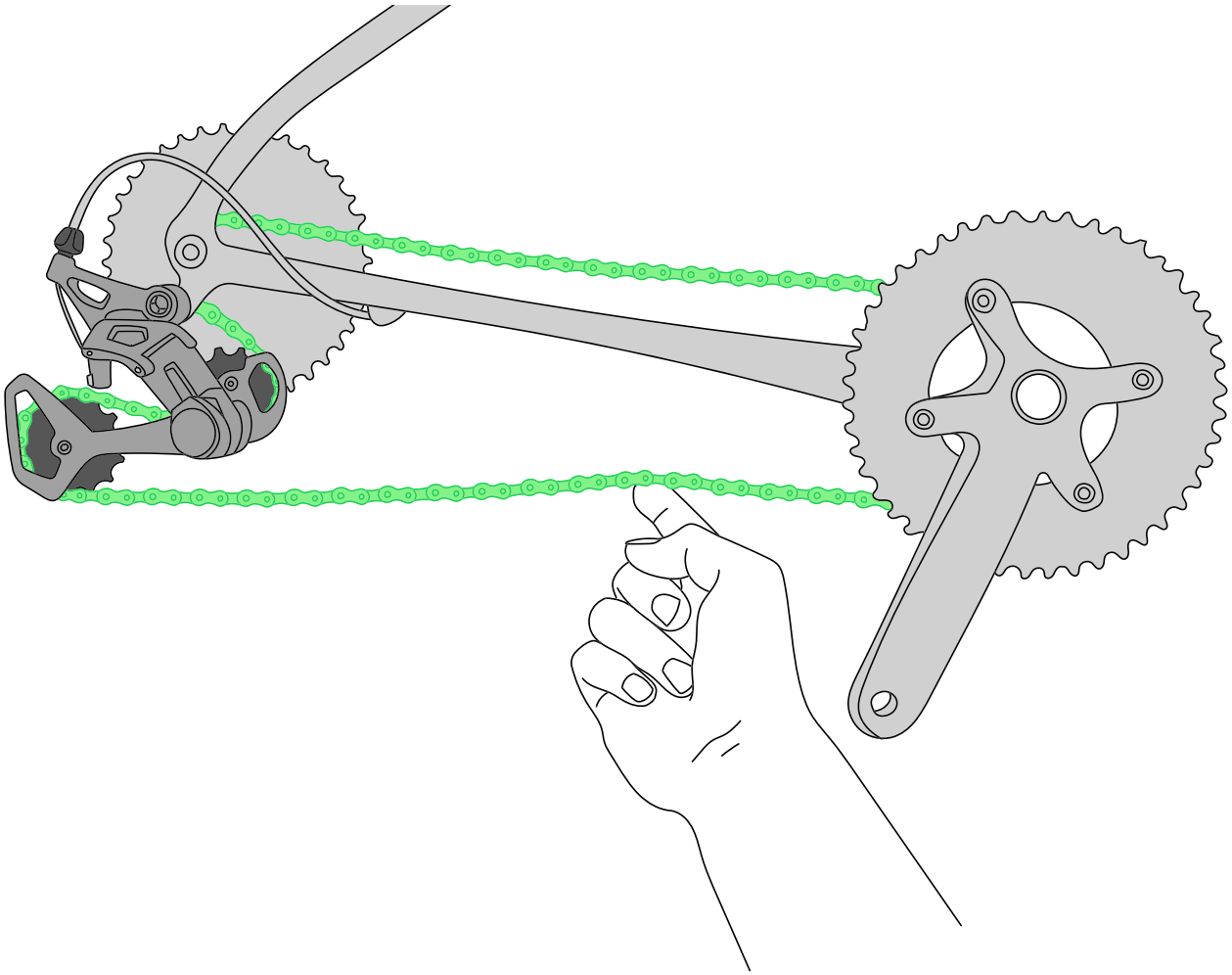

10. 2x B-Tension Adjustment

While still in the small chainring, shift to the smallest cog.

If you notice slack in the chain turn the b-tension screw clockwise until the **return spring stop screw** no longer contacts **the stop.**

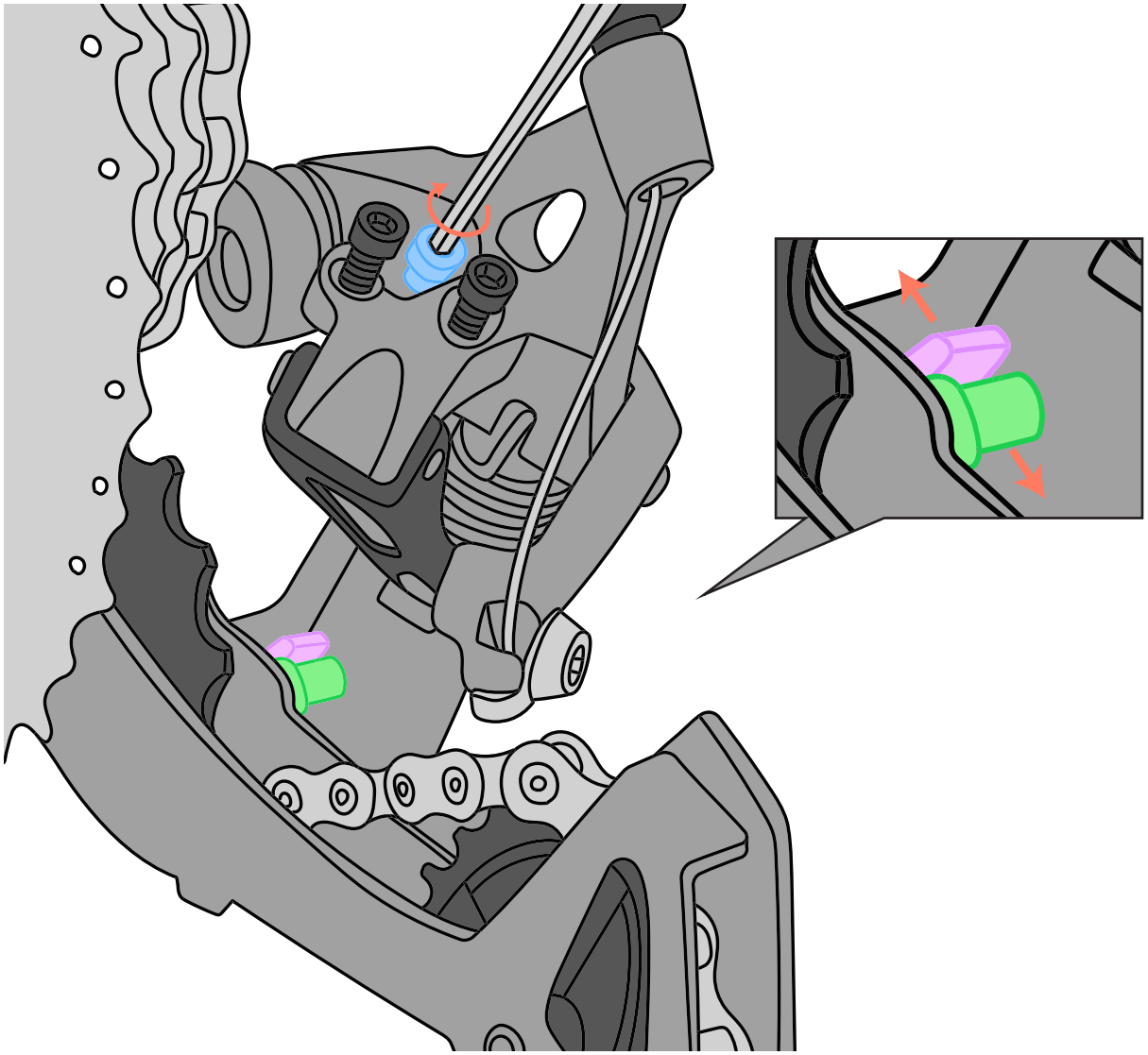

microSHIFT

www.microSHIFT.com