Very Good

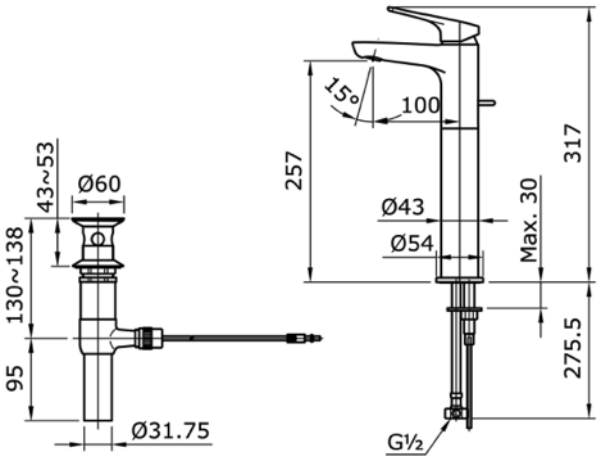

Brand

TOTO

Product Name

TX116LRRN

Description

- Extended single lever basin mixer with 1" pop-up waste

Colour / Material

Chrome

Specifications

Spout length	: 100 mm
Height	: 317 mm
Water pressure	: 0.05MPa ~ 0.75MPa